PUSIROBOT

CQPUSI ROBOT CONTROL SYSTEM

# User Manual

## PMC006C1 Series

Miniature Integrated Stepper Motor Controller

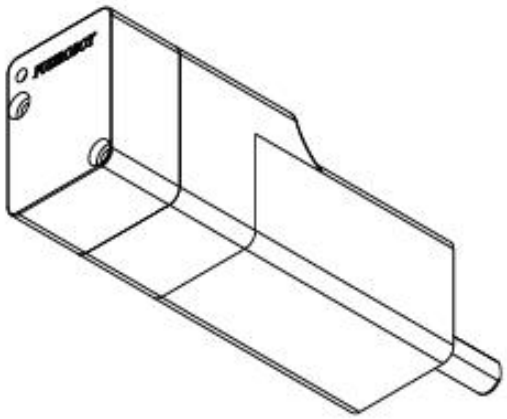

# 1. Version Control

## 1） Update Records

| Date | Author | Version | Remark |
|---|---|---|---|
| 2024/7/15 | Liu | V1.0.0 | Initial |
| 2024/12/30 | Liu | V1.0.1 | Update the register address |
| 2025/3/11 | Liu | V1.0.1 | Add a unit description for the high-speed mode |

Catalog

1 Introduction ..... 6
1.1 Statement of intellectual property right ..... 6
1.2 Disclaimer ..... 6
2 Overview ..... 7
2.1 General Description ..... 7
2.2 Features ..... 7
2.3 Production & Ordering Information ..... 8
3 Connector Description ..... 8
3.1 Terminal port location ..... 8
3.2 Motor connection J1 ..... 8
3.3 CAN network connection ..... 9
3.4 Limit switch connection ..... 9
3.5 Other limit switch connections ..... 10
3.6 Mechanical switch connection ..... 11
3.7 Analog Adjusting Speed ..... 11
4 Drive mode ..... 11
4.1 Normal open-loop/closed-loop mode ..... 11
4.2 High-speed torque mode ..... 12
5 CANopen communication ..... 12
5.1 CANopen introduction ..... 12
5.2 CAN frame structure ..... 13
5.3 CAN communication configuration ..... 13
5.3.1 Node ID ..... 13
5.3.2 Baud rate ..... 13
5.3.3 Group ID ..... 14
5.3.4 Device node name ..... 14
5.3.5 Hardware version ..... 14
5.3.6 Software version ..... 14
5.3.7 System control ..... 15
5.4 Condition monitoring ..... 15
5.4.1 Motor error status ..... 15
5.4.2 Controller status ..... 16
5.5 Micro stepping/Current ..... 16
5.5.1 Micro stepping ..... 16
5.5.2 Maximum phase current(Operating current) ..... 16
5.6 Working mode switching ..... 17
5.7 Position mode ..... 18
5.7.1 Position mode rotating direction ..... 18
5.7.2 Position mode start speed ..... 18
5.7.3 Position mode stop speed ..... 18
5.7.4 Position mode acceleration coefficient ..... 19
5.7.5 Position mode deceleration coefficient ..... 19
5.7.6 Position mode operating speed ..... 20

5.7.7 Position mode relative displacement command ..... 21
5.7.8 Position mode absolute displacement command ..... 21
5.8 Stop stepper command ..... 22
5.9 Commonly used parameters ..... 22
5.9.1 Motor position ..... 22
5.9.2 Encoder position (absolute value encoder closed loop) ..... 22
5.9.3 Current reduction ..... 23
5.9.4 Motor enable ..... 23
5.9.5 Real-time speed(Closed-loop) ..... 23
5.9.6 Temperature threshold ..... 24
5.9.7 Motor wiring configuration ..... 24
5.9.8 Automatic power-down save enabled ..... 25
5.10 External emergency stop ..... 25
5.10.1 External emergency stop enabled ..... 25
5.10.2 The trigger mode of external emergency stop ..... 25
5.10.3 Sensor type ..... 26
5.10.4 Debouncing delay ..... 26
5.11 General IO port ..... 26
5.11.1 General IO port setting ..... 26
5.11.2 General IO port value ..... 28
5.12 Closed-loop parameter ..... 28
5.12.1 Encoder resolution ..... 28
5.12.2 KP parameter ..... 29
5.12.3 KI parameter ..... 29
5.12.4 KD parameter ..... 29
5.12.5 Pre-filtering parameter ..... 29
5.12.6 Post-filtering parameter ..... 30
5.12.7 Stall length parameter ..... 30
5.13 High-speed torque mode switch ..... 30
5.14 Open loop application switch ..... 30
5.15 PP mode ..... 31
5.15.1 PP mode parameter 1 ..... 31
5.15.2 PP mode parameter 2 ..... 32
5.15.3 PP model work timing ..... 33
5.16 Synchronous position Motion mode ..... 36
5.16.1 SP speed ..... 36
5.16.2 SP position ..... 37
5.16.3 Synchronous start and stop ..... 37
5.17 Analog parameters ..... 37
5.17.1 Analog enabled ..... 38
5.17.2 Analog start_adc ..... 38
5.17.3 Analog end_adc ..... 38
5.17.4 Analog adjustment lower limit ..... 38
5.17.5 Analog adjustment upper limit ..... 38

5.17.6 Analog Adjustment Interval ..... 38
5.17.7 Analog adjustment trigger value ..... 39
5.17.8 Analog speed/position 1 ..... 39
5.17.9 Analog speed/position 2 ..... 39
5.18 offline programming ..... 39
5.18.1 Offline programming parameter 1 ..... 39
5.18.2 Offline programming parameter 2 ..... 40
5.19 Analogue input read ..... 40
5.20 Step notification ..... 41
5.21 Low-voltage protection ..... 41
5.21.1 Low-voltage protection control word ..... 42
5.21.2 Offline voltage threshold ..... 42
5.22 Homing parameters ..... 42
6 User-defined programs ..... 43
7 Tool software operation introduction ..... 43
7.1 Graphic programming support ..... 43
7.2 Scripting language support ..... 44
8 Electrical Characteristics ..... 44
9 Dimensions (Unit: mm) ..... 44
10 Appendix 1 PMC006C1 Object dictionary table ..... 46
Analog start_adc ..... 53
11 Appendix 2 CANopen Communication Examples ..... 54
11.1 SDO Read/Write Examples ..... 54
11.1.1 SDO Read ..... 54
11.1.1.1 Data frame format ..... 54
11.1.1.2 SDO Read example ..... 55
11.1.2 SDO Write in ..... 55
11.1.2.1 Data frame format ..... 55
11.1.2.2 SDO Write example ..... 57
12 Appendix 3 PDO configuration example ..... 57
12.1 PDO overview ..... 57
12.1.1 The structure PDO——Mapping parameter ..... 57
12.1.2 The structure PDO——Communication parameter ..... 58
12.1.3 PDO Trigger mode ..... 60
12.2 PDO Configuration example ..... 60
13 Appendix 4 SDO abort code error ..... 61

# 1 Introduction

## 1.1 Statement of intellectual property right

PMC006C1 series controller has been applied for the following national patent:

• Controller scheme and method have been applied for the protection of the invention patent.

• Controller circuit has been applied for the protection of utility model patent.

• Controller appearance has been applied for the protection of appearance patent protection.

PMC006C1 series controller has embedded firmware code, it would be considered as a violation of intellectual property protection act and regulations that any behavior of trying to destroy the function of firmware code protection. If this behavior acquires the software or other achievements of intellectual property protection without authorization of CQPUSI, CQPUSI has the right to stop such behavior by filing a lawsuit according to the act.

## 1.2 Disclaimer

The using method of the device and other content in the description of this manual is only used to provide convenience for you, and may be update in future version. To ensure the application conforms to the technical specifications is the responsibility of your own. CQPUSI does not make any form of statement

or guarantee to the information, which include but not limited to usage, quality, performance, merchantability or applicability of specific purpose. CQPUSI is not responsible for these information and the consequences result caused by such information. If the CQPUSI device is used for life support and/or life safety applications, all risks are borne by the buyer. The buyer agrees to protect the CQPUSI from legal liability and compensation for any injury, claim, lawsuit or loss caused by the application.

# 2 Overview

## 2.1 General Description

PMC006C1 is a micro all-in-one stepper motor microstepping controller, which can be directly installed on the back cover of the 20 series stepper motor, the controller provides a simple communication network interface, which can easily realize the industrial control network system of up to 120 nodes, and can realize encoder-based closed-loop control according to user requirements. PMC006C1 adopts the industry standard CANOPEN DS301 control protocol, which is suitable for a variety of high-precision, wide-range industrial applications.

## 2.2 Features

- ✓ Wide range of 9-36V single voltage supply
- ✓ Output current 0.2A ~ 1A. Adjustable phase current by commands
- ✓ Automatic control of S curve acceleration and deceleration
- ✓ Support Position/Velocity/PP/PV mode etc. motion mode
- ✓ 4000PPR incremental encoder by default; Supports single-turn and multi-turn absolute encoders;
- ✓ Support limit function;
- ✓ Support normal open-loop mode, normal closed-loop mode, closed-loop high-speed torque mode
- ✓ Open-loop and closed-loop applications can be switched
- ✓ Support for enabling the automatic deviation correction function in high-speed torque mode
- ✓ Support 0/2/4/8/16/32/64/128 microstepping resolution
- ✓ Suitable for 4/6/8 lines of 2 phase stepper motor
- ✓ Support LUA scripting language programming
- ✓ Automatic over-temperature, over-current, under-voltage and over-voltage protection
- ✓ Analog Input Application (Special edition)

## 2.3 Production & Ordering Information

In order to serve you quicker and better, please provide the product number in following format when ordering PMC006C1：

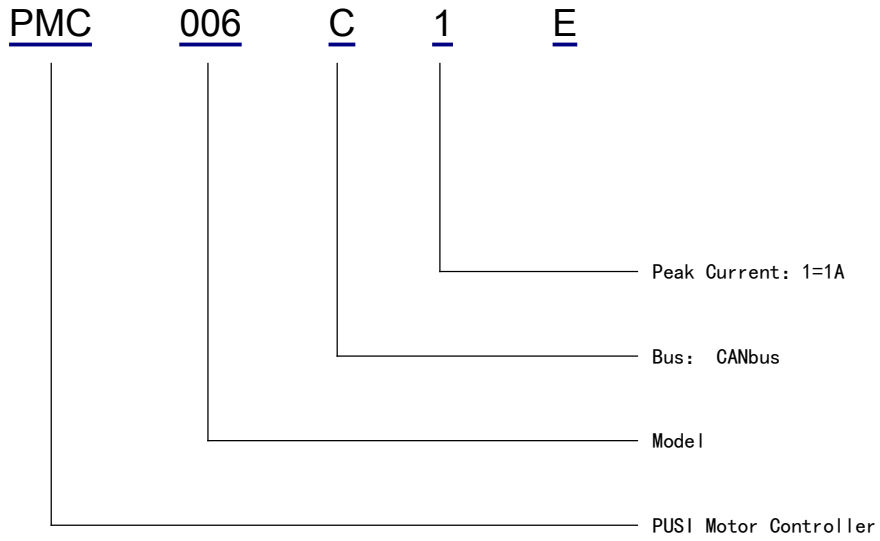


Remark:

E：Closed-loop type.

# 3 Connector Description

## 3.1 Terminal port location

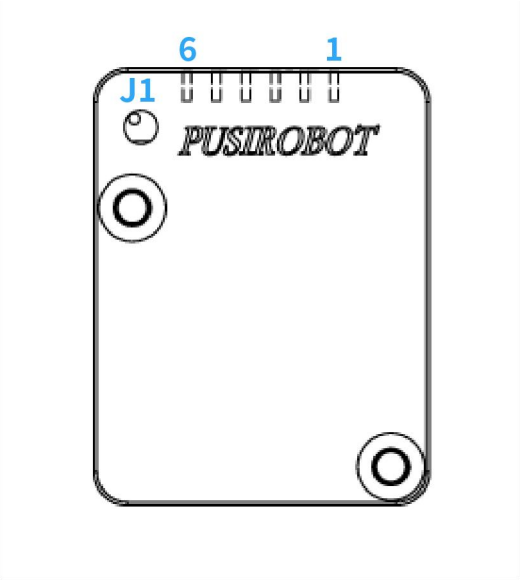


## 3.2 Motor connection J1

| Pin no | 1 | 2 | 3 | 4 | 5 | 6 |
|---|---|---|---|---|---|---|
| Designator | VCC | GND | CANH | CANL | EXT2/AIN | DVDD |

Description:

VCC： Supply voltage, 9-36V.

GND： Supply voltage ground.

CANH: Connect the transceiver interface of the CAN module

CANL: Connect the transceiver interface of the CAN module

DVDD： Controller voltage output(+5V). Maximum current is 100mA.

EXT2/AIN: Limit interface (or analog input interface), 0-3.3V

WARNING: The voltage of all signal ports must be between -0.3V~ +5V, and exceeding the range may cause permanent damage to the controller.

## 3.3 CAN network connection

Transmission distances of up to 5000 meters can be achieved using CAN bus connections. The CAN bus is a network solution composed of multiple PMC006C1 controllers, which is compatible with CAN2.0A and CAN2.0B technical specifications, and can connect up to 127 nodes.

Note: It is recommended to use a 120 ohm shielded twisted pair cable for the CAN bus, and a 120 ohm terminal resistor needs to be connected at each end of the twisted pair.

PMC006C1 supports the standard CANopen DS301 protocol, CQPUSI provides PUSICAN, a dedicated debugging tool for networking PMC006C1, which currently supports USB2CAN modules from many mainstream brands on the market.

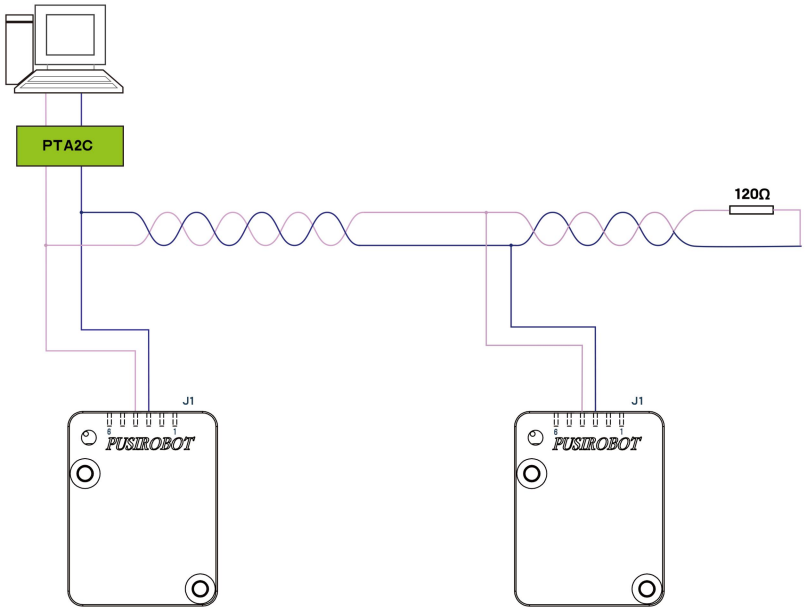


## 3.4 Limit switch connection

The PMC006C1 EXT2 pin can be used to connect an external limit (home position) switch, and the trigger mode of each pin can be selected in real time by command. GPIO8 is configured as a high-level output, as shown on the left in the figure below, EXT2 is set to pull-up enable, and

the rising edge is triggered. As shown on the right in the figure below, EXT2 is set to pull-down enable and falling edge trigger.

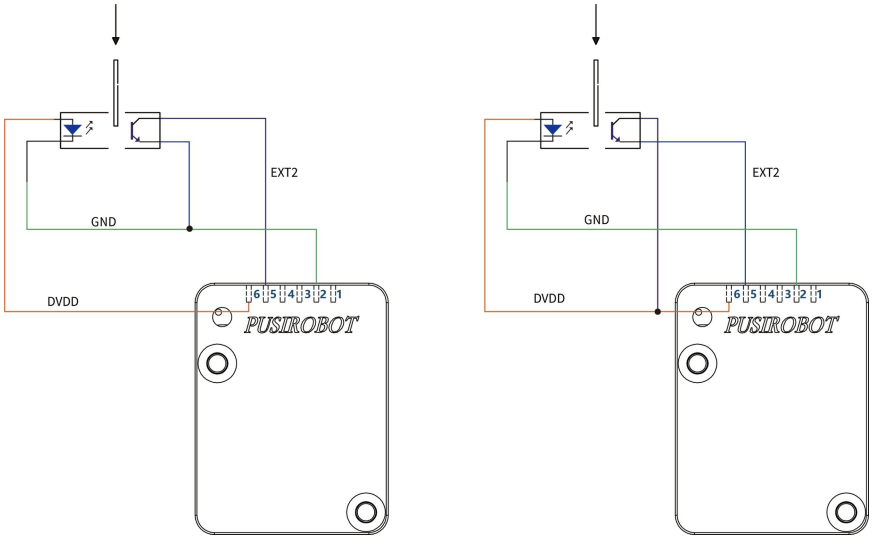


## 3.5 Other limit switch connections

The EXT2 pin of the PMC006C1 controller can be used to connect to an external limit switch, but its acceptance voltage cannot exceed 5V. Users can freely configure the trigger edge and pull-up mode, the initial level will change with the configuration mode, the default falling edge is set to high, and the rising edge is set to low. When using a 24V HVDC three-wire NPN open-collector output proximity switch (such as Omron E2EC/X□C□ or E2E-X□D1S series), the connection method is shown in the figure below, and the EXT2 needs to be configured with the initial level high and the rising edge triggered. Since the input port can only accept a 5V voltage range, it cannot be connected to a 24V input signal.

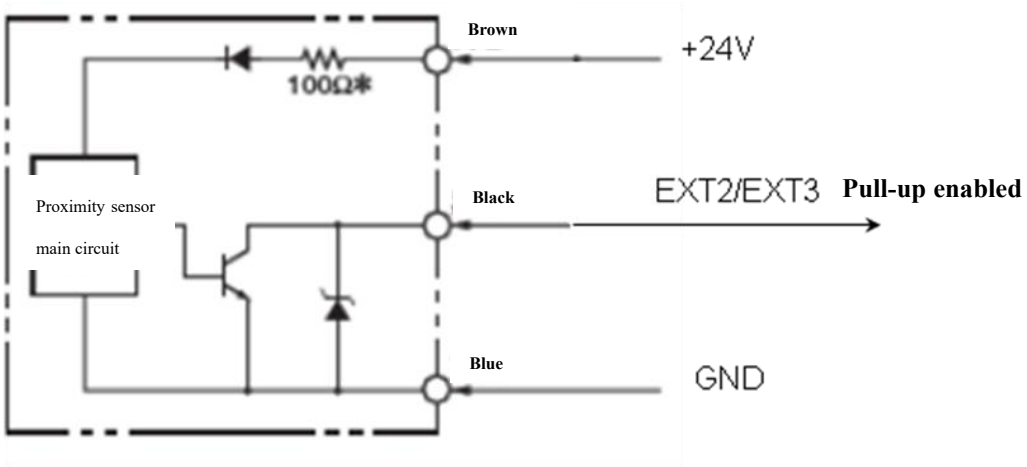


There are two types of common external limit switches, one is a four-wire through-beam optocoupler without an internal circuit, and the other is a three-wire or five-wire optocoupler with an internal circuit, which is divided into PNP type and NPN type. And there is a difference between light conduction and shading conduction. Different settings are required for different types of optocouplers. For NPN or PNP type sensors with internal circuitry, it is necessary to select the appropriate operating mode and trigger method. On the left of the figure below is the PNP sensor, the operation mode is light on, and the EXT2 port is configured to trigger the falling

edge and enable the pull-down. On the right side of the figure is the NPN sensor, the action mode is ON when the light is in, and the EXT2 port is configured to be triggered by the rising edge and enabled by pull-up.

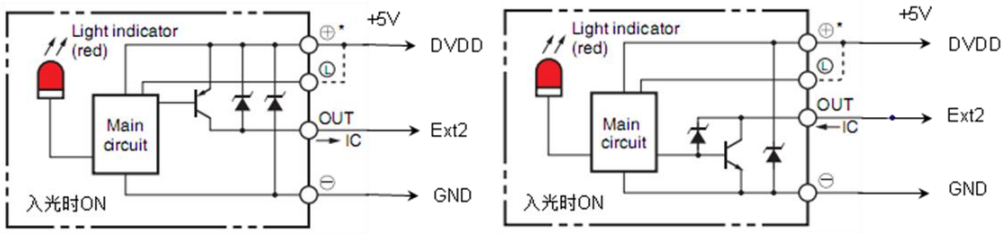


## 3.6 Mechanical switch connection

When using mechanical button switches or relay contacts for limiting, direct connection should be used. When the initial level is high, the signal interface is displayed as low when connected to GND, as shown on the left side of the figure below. When the initial level is low, it is displayed as high when connected to the DVD, as shown on the right in the figure below.




## 3.7 Analog Adjusting Speed

PMC006C1 controller can use the analog speed control function as well as the analog positioning function in offline operation mode, in which case the EXT2 pin is used as an analog input port.

In offline mode, the EXT2 pin is used as an analog input port and can be directly connected to an external input voltage in the range of 0~3.3V. When using PLC or other industrial control equipment to output 0-10V, 0-24V or 4~20mA analog control, special instructions are required to distinguish the version.

Analog speed regulation: Set a speed range, enter the minimum value corresponding to the minimum value of the speed, and enter the maximum value corresponding to the maximum value of the speed. By adjusting the input value, the motor rotates at the corresponding speed.

Analog positioning: Set a position interval, enter the minimum value corresponding to the position minimum, and enter the maximum value corresponding to the position maximum. The current position of the motor is adjusted to change the input value so that the motor stops at the specified position.

Note: If you need to purchase, please contact the sales staff in advance.

# 4 Drive mode

## 4.1 Normal open-loop/closed-loop mode

The applicable speed range of normal mode is 10-1200RPM, and the unit of operating parameters such as speed and start-stop speed is PPS. Open-loop and closed-loop switching can be made by modifying register 0x6015.

## 4.2 High-speed torque mode

The high-speed torque mode is suitable for the speed range of 1000-5000RPM, and the controller can be switched from normal mode to high-speed torque mode by enabling the torque loop (0x605d). The high-speed torque function is as follows:

1. In torque mode, the motor will automatically match the magnetism when powered on to ensure accurate position;

2. The controller microstepping is fixed and cannot be manually modified;

3. The automatic deviation correction function is started when the pre-filter > 20;

4. If disabled, the PID parameter does not take effect. After enabled, the default parameters KP 15, KI 8, and KD 25 are modified according to the operation requirements (it is not recommended to modify them unless there are special requirements), the value is written to the register, and the power-off save instruction is written once before it takes effect. The closed-loop version works.

5. The torque mode will automatically slow down when encountering resistance, and will automatically increase speed when the resistance decreases; The torque is maintained at a constant maximum value during automatic deviation correction, and the deviation correction speed is 400RPM;

6. Units of High Speed Torque Mode:

a. Start speed, stop speed, maximum speed: 0.1lines/ms, for example, set 8000, that is, 800000lines/s, 4000ppr encoder is 3000rpm; Default parameters: startup speed 20 x 0.1lines/ms, stop speed 20 x 0.1lines/ms

b. Acceleration and deceleration: 0.01 lines/ms^2, for example, 5 represents 50000 lines/s^2, default parameters: acceleration 32 * 0.01 lines/ms^2, deceleration 32 * 0.01 lines/ms^2

# 5 CANopen communication

## 5.1 CANopen introduction

CAL provides all network management services and messaging protocols, but does not define the content of the object or the type of object being communicated (it only defines how, not what), which is where CANopen comes in. CANopen is developed on the basis of CAL, using a subset of CAL communication and service protocols to provide an implementation of a distributed control system. CANopen allows the nodes to be scaled at will: simple or complex, while ensuring the interoperability of the network nodes.

The core concept of CANopen is the Object Dictionary (OD), which is also used in other fieldbus (Profibus, Interbus-S) systems. CANopen communication provides access to all parameters of the drive via the Object Dictionary (OD). Note: The object dictionary is not part of the CAL, but is implemented in CANopen, and the PMC006C1 supported object dictionary is shown in Appendix I.

The CANopen communication model defines the following types of messages (communication objects):

| Abbreviation | Full name | Description |
|---|---|---|
| SDO | Service Data Object | Used for non-time critical data, such as parameters. |
| PDO | Process Data Object | Used to transfer time critical data(Setting values, Control word, status information, etc.) |
| SYNC | Synchronization Message | Used to synchronize CAN nodes. |
| EMCY | Emergency Message | Used to transport alarm event of a driver. |
| NMT | Network Management | Used for CANopen network management. |
| Heartbeat | Error Control Protocol | Used for monitoring the life status of all nodes. |

## 5.2 CAN frame structure

CAN Data is transmitted between the host (controller) and the bus node through the data frame. The following table is the structure of the data frame.

| Header | Arbitration domain | | Control domain | Data domain | Check field | Response domain | Tail frame |
|---|---|---|---|---|---|---|---|
| | COB-ID(communication object identifier) | RTR(remote request) | | | | | |
| 1bit | 11 or 29 bits | 1bit | 6bits | 0~8byte | 16bits | 2bits | 7bits |

## 5.3 CAN communication configuration

PMC006C1 factory default settings: node ID is 3/5, the baud rate is 125Kbit/s. The user can modify the settings by supporting the CANOPEN master debugging tool.

### 5.3.1 Node ID

| Object name | Node ID |
|---|---|
| SDO ID | 0x2002 |
| Object type | U8,rw |
| Range | 1-127 |
| Storage type | ROM |
| Default value | 3/5 |

### 5.3.2 Baud rate

| Object name | Baud rate |
|---|---|
| SDO ID | 0x2003 |
| Object type | U8,rw |
| Range | 0,1,2,3,4,5,6,7,8 |

| | |
|---|---|
| Storage type | ROM |
| Default value | 4 |

Relationship between each index and the baud rate is as follows:

0：20Kbit/s

1：25Kbit/s

2：50Kbit/s

3：100Kbit/s

4：125Kbit/s

5：250Kbit/s

6：500Kbit/s

7：800Kbit/s

8：1000Kbit/s

### 5.3.3 Group ID

| | |
|---|---|
| Object name | Group ID |
| SDO ID | 0x2006 |
| Object type | U8,rw |
| Range | 1-127 |
| Storage type | ROM |
| Default value | 0 |

This object needs to be configured when using the synchronous run function.

### 5.3.4 Device node name

| | |
|---|---|
| Object name | Device node name |
| SDO ID | 0x1008 |
| Object type | string,ro |
| Range | - |
| Storage type | ROM |
| Default value | - |

### 5.3.5 Hardware version

| | |
|---|---|
| Object name | Hardware version |
| SDO ID | 0x1009 |
| Object type | string,ro |
| Range | - |
| Storage type | ROM |
| Default value | - |

### 5.3.6 Software version

| | |
|---|---|
| Object name | Software version |
| SDO ID | 0x100A |
| Object type | string,ro |
| Range | - |

| | |
|---|---|
| Storage type | ROM |
| Default value | - |

### 5.3.7 System control

| | |
|---|---|
| Object name | System control |
| SDO ID | 0x2007 |
| Object type | U8,ro |
| Range | 1，2，3 |
| Storage type | RAM |
| Default value | - |

System control values are defined as follows:

1: Jump to bootloader

2: Save Object Dictionary parameters(i.e. power down save command)

3: Reset factory settings

Note: the Storage type in the Object Dictionary which is ROM parameter is temporarily stored in memory after written by SDO. If you need to keep it permanently, you need to perform power down save operation for the Object Dictionary parameter.

## 5.4 Condition monitoring

### 5.4.1 Motor error status

| | |
|---|---|
| Object name | Error status |
| Instruct address | 0x6000 |
| Object type | U8,rw |
| Range | bit |
| Storage type | RAM |
| Default value | 0 |

Driver state are defined as follows:

Bit0： OTS, over temperature shutdown

Bit1: AOCP, motor over-current

Bit2: BOCP, magnetic core position error

Bit3: APDF, Wrong direction of rotation when facing magnetism

Bit4: BPDF, Wrong rotation angle when facing magnetism

Bit5: UVLO, low supply voltage warning

Bit6: SERR, encoder packet error

Bit7: EERR, encoder position error

Clear the corresponding error state by writing 1 to the corresponding bit, for example, write 18 00 00 00 to clear the flags of bit3 and bit4, that is, to clear the wrong rotation direction when facing the magnet and the wrong rotation angle when facing the magnet, and write FF to be fully clear.

Note: bit2/bit3/bit4/bit6/bit7 only takes effect for high-speed torque mode.

### 5.4.2 Controller status

| Object name | Controller status |
|---|---|
| Instruct address | 0x6001 |
| Object type | U8,rw |
| Range | bit |
| Storage type | RAM |
| Default value | 0 |

Controller status is defined as follows:

Bit0：External stop 1

Bit1：External stop 2

Bit2：Stall state

Bit3：busy state

Bit4：Homing state

Bit5：The FIFO of PVT mode 3 is empty

Bit6：Lower FIFO limit for PVT mode 3

Bit7：Upper FIFO limit for PVT mode 3

In addition to the busy state, you can write 1 to clear the response state, and the usage is the same as 6000h.

## 5.5 Micro stepping/Current

### 5.5.1 Micro stepping

| Object name | Micro stepping |
|---|---|
| Instruct address | 0x600A |
| Object type | U16,rw |
| Range | 0,2,4,8,16,32,64,128 |
| Storage type | ROM |
| Default value | 32 |

Only parameters within the range can be configured, and other values are outliers. In high-speed torque mode, subdivisions can only be read and cannot be set.

### 5.5.2 Maximum phase current(Operating current)

| Object name | Maximum phase current |
|---|---|
| SDO ID | 0x600B |
| Object type | U16,rw |
| Range | 0-6000 |
| Storage type | ROM |
| Default value | 0 |

The maximum phase current is the supply current to the motor during normal operation, usually set to the rated current of the motor. In some cases, adjustments can be made appropriately, with a general range of+-20% and not exceeding 50%. Excessive current can cause severe heat generation in the motor, and prolonged operation of the motor may pose a risk of

demagnetization, affecting its lifespan. Unit: mA

## 5.6 Working mode switching

| Object name | Working mode switching |
|---|---|
| SDO ID | 0x6005 |
| Object type | U8,rw |
| Range | 0,1,4,5 |
| Storage type | RAM |
| Default value | 0 |

The values of the motor operating mode are defined as follows:

0: Position mode

1: Velocity mode (including analog speed regulation)

4: PP (Profile Position) mode (including analog positioning)

5: PV (Profile Velocity) mode

6: Homing mode

Position Mode:

The setting of the position mode is simple, easy to operate, you can use the relative or absolute running motion mode, after setting the running speed and direction of movement, give the corresponding running instructions, the motor will move to the corresponding position, because the acceleration and deceleration is the gear setting, the acceleration and deceleration can not be accurately adjusted, the equipment or parameters need to be debugged according to the load situation, the stepping command setting needs to be sent when the controller is idle, so to change the speed, change the stepping position, you need to wait for the motor to stop and then send the corresponding instructions, before it can run, Otherwise, the command will not be received.

Velocity Mode:

After entering the velocity mode, set the running speed and the motor will rotate all the time. Unless the limit or stop stepping command is triggered or the speed mode is exited, the motor will rotate according to the running speed, and the running speed can be changed (positive positive rotation, negative negative reversal) and speed adjustment can be adjusted by setting the running speed during operation, without stopping the movement. The velocity mode and the position mode share the same parameter register, and the acceleration and deceleration and start-stop speed cannot be modified during operation. The velocity mode is easy to set and stable, which is convenient for long-distance variable speed movement. If it is at high speed, changing direction directly may cause stalling. The speed setting needs to be adjusted according to the actual operation.

PP Mode:

PP mode uses trapezoidal acceleration and deceleration movement, each run can change the acceleration and deceleration, start and stop speed, running speed, running direction and target position, through the unified execution of the control word, you can switch the running task or preset the next task during the movement. PP mode can also use absolute or relative operation modes, and the acceleration and deceleration value settings are open to better control the smoothness of the operation and perform more complex operation planning.

PV Mode:

PV mode is called Profile Velocity Mode, which also uses trapezoidal acceleration and deceleration mode, and shares parameters such as start-stop speed, acceleration and deceleration, and running speed with PP mode. After entering PV mode, you need to set the running speed for the first run, use the control word to start the run, and then change the speed only need to modify the value of the running speed.

During PV mode operation, the motor will rotate according to the set running speed, and the stop can be achieved by exiting or switching the mode/setting the running speed to 0/step stop command. During the operation, the running speed can be set to change the running direction (positive positive rotation, negative negative reversal) and adjust the speed magnitude, without pausing the movement to set the parameters. Because the acceleration and deceleration are controllable and the acceleration and deceleration are uniform, it is easier to calculate the running time, and changing the running direction at high speed will not cause stalling

## 5.7 Position mode

### 5.7.1 Position mode rotating direction

| Object name | Rotating direction |
|---|---|
| Instruct address | 0x6002 |
| Object type | U8,rw |
| Range | 0,1 |
| Storage type | RAM |
| Default value | 0 |

The value of the rotation direction is defined as follows:

0: forward

1: backward

### 5.7.2 Position mode start speed

| Object name | Start speed(Unit: pps) |
|---|---|
| Unit | Normal mode pps<br>High speed mode 0.1lines/ms |
| Instruct address | 0x6006 |
| Object type | U16,rw |
| Range | 0-0xFFFF |
| Storage type | ROM |
| Default value | 600 |

### 5.7.3 Position mode stop speed

| Object name | Stop speed(Unit: pps) |
|---|---|
| Unit | Normal mode pps<br>High speed mode 0.1lines/ms |
| Instruct address | 0x6007 |

| | |
|---|---|
| Object type | U16,rw |
| Range | 0-0xFFFF |
| Storage type | ROM |
| Default value | 600 |

If the start speed and stop speed jump directly, for example, jump from 0 to the maximum speed of starting speed and then accelerate or decelerate from maximum speed to stop speed and then jump to 0, so the start and stop speed cannot be set to 0.

The start-stop speed of the 600 can be adapted to most operating scenarios in normal mode, and it can be switched when it needs to be started faster or run at a lower speed, and the rest of the time the RPM is configured using microstepping and speed settings.

### 5.7.4 Position mode acceleration coefficient

| | |
|---|---|
| Object name | Acceleration coefficient |
| Unit | The normal mode has 8 levels<br>High speed mode 0.01lines/ms^2 |
| Instruct address | 0x6008 |
| Object type | U16,rw |
| Range | Normal mode 0-8<br>High speed mode 0-0xFFFF |
| Storage type | ROM |
| Default value | 8 |

### 5.7.5 Position mode deceleration coefficient

| | |
|---|---|
| Object name | Deceleration coefficient |
| Unit | The normal mode has 8 levels<br>High speed mode 0.01lines/ms^2 |
| Instruct address | 0x6009 |
| Object type | U8,rw |
| Range | Normal mode 0-8<br>High speed mode 0-0xFFFF |
| Storage type | ROM |
| Default value | 8 |

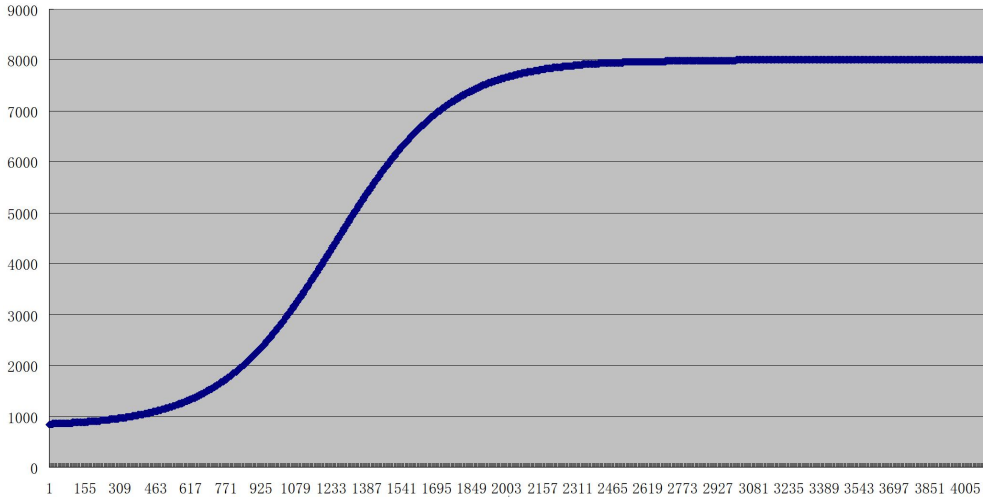


Figure 5-1

The Position mode uses S curve acceleration and deceleration. As shown in Figure 5-1, the start-up speed, stop speed, acceleration and deceleration can be configured separately, and the acceleration and deceleration support 1~8 for a total of 8 gears, and the corresponding acceleration values for each gear are as follows.

| Gear | Acceleration and deceleration value（PPS2） |
|---|---|
| 0 | Acceleration and deceleration cannot be enable |
| 1 | 77440 |
| 2 | 48410 |
| 3 | 27170 |
| 4 | 21510 |
| 5 | 14080 |
| 6 | 10460 |
| 7 | 6915 |
| 8 | 5210 |

### 5.7.6 Position mode operating speed

| Object name | Position mode operating speed（pps） |
|---|---|
| Unit | Normal mode pps<br>High speed mode 0.1lines/ms |
| Instruct address | 0x6003 |
| Object type | S32,rw |
| Range | -200000 ~ +200000 |
| Storage type | RAM |
| Default value | 0 |

Note: the speed is a signed variable. Positive represents that the direction is 1, and negative represents that the direction is 0. So in the displacement mode it is recommended to set the speed firstly , and then set the direction.

In normal mode, the RPM per minute and the microstepping of the set, as well as the magnitude of the speed value, are as follows:

RPM = (PPS*60)/ (200*microstepping)

Similarly, the rotational speed per second is:

RPS = PPS / (200 * microstepping)

### 5.7.7 Position mode relative displacement command

| Object name | Relative displacement command |
|---|---|
| Instruct address | 0x6004 |
| Object type | U32,rw |
| Range | 0x0-0xFFFFFFFF |
| Storage type | RAM |
| Default value | 0 |

Relative to the current motor position, let the motor run for a set number of steps, and an error will be reported if the displacement is 0. Write step number, then the controller will control the motor rotate a given number of steps which is calculated based on the current microstepping settings at the setting direction, speed and acceleration.

In open-loop mode, the number of steps is calculated based on the current microstepping setting.

In the incremental encoder closed-loop mode, the input unit is 4 times the resolution of the encoder, for example, CPR=4000, then the motor rotates once when 16000 is input.

In the closed-loop mode of the absolute encoder, the input unit is the same as the encoder counting unit, for example, if the accuracy is 14 bits, then the motor rotates once when 16384 is entered.

### 5.7.8 Position mode absolute displacement command

| Object name | Absolute displacement command |
|---|---|
| Instruct address | 0x601c |
| Object name | S32,rw |
| Range | -2^31 ~ (2^31-1) |
| Storage type | RAM |
| Default value | 0 |

The absolute displacement command gives the target position, and the controller will automatically calculate the direction and the required number of steps, and control the stepper motor to rotate to the specified position according to the set speed and acceleration.

In open-loop mode, the number of steps is calculated based on the current microstepping setting.

The number of pulses is calculated in the same way as the relative displacement command.

## 5.8 Stop stepper command

| Object name | Stop stepper command |
|---|---|
| Instruct address | 0x6020 |
| Object type | U8,rw |
| Range | 0 |
| Storage type | RAM |
| Default value | 0 |

The command immediately terminates the operation of the motor, there is no deceleration process, and it can take effect by writing 0.

## 5.9 Commonly used parameters

### 5.9.1 Motor position

| Object name | Motor position |
|---|---|
| Instruct address | 0x600C |
| Object type | S32,rw |
| Range | -2^31 ~ (2^31-1) |
| Storage type | RAM |
| Default value | 0 |

The number of revolutions of the motor is expressed by dividing the number of pulses by the number of pulses per turn.

In the open-loop mode, the motor position is not saved, and the position information is automatically cleared after the controller is powered off. Each turn is a subdivision * 200 pulses.

In incremental closed-loop mode, the motor position is not saved in conventional applications. There is a switch inside the controller that records the position of the motor before the power is lost. It is generally used in conjunction with brakes to prevent the motor from moving when the power is lost. Otherwise, the saved location is not informative. Incremental is a quadruple frequency of PPR, for example, 1000 lines are 4000 pulses The motor rotates one turn.

In the closed-loop mode of the absolute value of a single turn, the controller can record the change of the motor position within one turn, and the value of the extra turn will be automatically discarded after the power is lost. For value storage greater than one circle, you can refer to the same application method for incremental expressions.

Multi-turn absolute closed-loop mode, which can record the change of motor position in real time, and can still work after power failure. The position of the limit switch can be dispensed with. The absolute accuracy is 2^12,4096 pulses per turn.

In the multi-turn absolute closed-loop mode, the encoder position data will be read in real time after the controller is powered on and when the power is lost.

### 5.9.2 Encoder position (absolute value encoder closed loop)

| Object Name | Encoder position |
|---|---|
| Instruct address | 0x6035 |

| | |
|---|---|
| Instruct address | S32,rw |
| Object type | -2^31 ~ (2^31-1) |
| Range | RAM |
| Storage type | 0 |

For now only single-turn and multi-turn value reading is open, and the encoder feedback position is read in real time, and the value cannot be changed by command.

Currently, only absolute encoder readings are available.

### 5.9.3 Current reduction

| | |
|---|---|
| Object name | Current reduction coefficient |
| Instruct address | 0x600D |
| Object type | U8,rw |
| Range | 0-3 |
| Storage type | ROM |
| Default value | 2 |

The value is defined as follows:

0：Decay 0%;

1：Decay 50%

2：Decay 75%

3：Decay 87.5%

0-3 corresponds to 4 gears of 100%, 50%, 25% and 12.5% idle current supply, the ratio is based on the percentage of the maximum phase current of 600Bh. The default is 25% for 2nd gear.

### 5.9.4 Motor enable

| | |
|---|---|
| Object name | Motor enable |
| Instruct address | 0x600E |
| Object type | U8,rw |
| Range | 0,1 |
| Storage type | RAM |
| Default value | 1 |

The value of the motor is defined as follows:

0: Offline

1: Motor enable

Release control of the motor immediately after setting offline, the motor loses power supply and loses holding torque.

The controller is enabled by default, and no settings need to be manually written for power-on.

### 5.9.5 Real-time speed(Closed-loop)

| | |
|---|---|
| Object name | Real-time speed(pps) |
| Unit | Normal mode pps |

| | |
|---|---|
| | High speed mode 0.1lines/ms |
| Instruct address | 0x6030 |
| Object type | S32, ro |
| Range | -300000~+300000 |
| Storage type | RAM |
| Default value | 0 |

Registers that can only be read in closed-loop applications. This parameter is to read the feedback value of the encoder to calculate the running speed, limited by the transmission speed, so the compensation value needs to be added, the recommended compensation formula is as follows:

(PPS*60/200/microstepping/10000) +1

In practice, it is necessary to test the motor or application separately and then write the compensation value.

Real-time speed is a signed variable that represents a direction of 1 when positive and 0 when negative. At high speed torque, the reading value is 100 times the actual operating speed.

### 5.9.6 Temperature threshold

| Object name | Temperature threshold |
|---|---|
| SDO ID | 0x6014 |
| Object type | U8,rw |
| Range | 100-135 |
| Storage type | ROM |
| Default value | 0x64 |

When the detection value is higher than the set threshold, the motor state (6000h) will be set to overheat, and the motor enable (600Eh) will be set to 0 to protect the controller.

### 5.9.7 Motor wiring configuration

| Object name | Motor wiring configuration |
|---|---|
| SDO ID | 0x6033 |
| Object type | U8,rw |
| Range | 0-3 |
| Storage type | ROM |
| Default value | 3 |

Using the register for direction control, you can change the motor and encoder reading direction without changing the physical line sequence, where bit0 is the motor line sequence, bit1 is the encoder line sequence, and the default is 0.

### 5.9.8 Automatic power-down save enabled

| | |
|---|---|
| Object name | Automatic power-down save enabled |
| Instruct address | 0x602A |
| Object type | U8,rw |
| Range | 0-1 |
| Storage type | ROM |
| Default value | 0 |

Enabled when closed loop, the controller automatically detects the power-off of the system after it is enabled, and writes the current motor position into the EEPROM, it needs to be used with a power-off save instruction.

## 5.10 External emergency stop

PMC006C1 controller provides a dedicated limit switch input, EXT2, which can be used as an emergency stop or zero point search function.

When the emergency stop function is enabled, if the corresponding input pin detects a valid trigger edge, the controller will immediately lock the motor and stop responding to the step command, and the user can read the controller status to see which input pin triggered the emergency stop. Only when the user clears the corresponding state bit will the controller continue to respond to new step commands.

| | |
|---|---|
| Object name | External emergency stop |
| Instruct address | 0x600F |
| Object type | Record |
| Storage type | ROM |
| Reference number | 2 |

### 5.10.1 External emergency stop enabled

Subindex 0x01: External emergency stop enabled

| | |
|---|---|
| Object type | U8,rw |
| Range | Bit |
| Default value | 0 |

Each external emergency enable is represented by 1 bit, 0 for prohibition, and 1 for enablement, which is defined as follows:

bit0: external emergency stop 1 is enabled

bit1: External emergency stop 2 is enabled

### 5.10.2 The trigger mode of external emergency stop

| | |
|---|---|
| Object type | U8,rw |
| Range | Bit |
| Default value | 0 |

The stop trigger mode for each external emergency is represented by 1 bit, 0 for falling triggering and 1 for rising triggering, defined as follows:

bit0: External emergency stop 1 trigger mode

bit1: External emergency stop 2 trigger mode

### 5.10.3 Sensor type

| Object type | U8,rw |
|---|---|
| Range | 0-1 |
| Default value | 0 |

The meaning of the sensor type value is as follows:

0: When the trigger mode is configured as the rising edge, the controller is configured as an internal pull-down resistor; When configured as a falling edge, the controller configuration is a pull-up resistor inside; Typically used for NPN type sensors;

1: When the trigger mode is configured as the rising edge, the controller is configured as an internal pull-up resistor; When configured as a falling edge, the controller is configured with a pull-down resistor inside; Typically used for PNP type sensors;

The external emergency stop trigger delay can be modified by 0x601A object, and the controller will delay the time set after detecting the edge signal, and then check whether its level state is correct, and if it is correct, the motor will be triggered to stop urgently, otherwise the motor will continue to rotate.

### 5. 10. 4 Debouncing delay

| Object name | EXT1/EXT2 stabilize delay（ms） |
|---|---|
| Instruct address | 0x601a |
| Object type | Record |
| Range | 0~200 |
| Storage type | ROM |
| Default value | 30 |

Similar to the keyboard debouncing delay, this parameter can set the high/low level time that needs to be maintained after triggering to prevent false triggering.

## 5.11 General IO port

The controller provides 1 external emergency stop input (EXT2) port.

### 5. 11. 1 General IO port setting

| Object name | General IO port setting |
|---|---|
| Instruct address | 0x6011 |
| Object type | Record |
| Storage type | ROM |

| Reference number | 2 |
|---|---|

Subindex 0x01: IO port direction

| Object type | U16,rw |
|---|---|
| Range | bit |
| Default value | 0 |

The direction of each IO port is represented by 1bit. 0 represents input, and 1 represents output. The meaning of each bit is as follow:

Bit0：GPIO1

Bit1：GPIO2

Bit2：GPIO3

Bit3：GPIO4

Bit4：GPIO5

Bit5：GPIO6

Bit6：GPIO7

Bit7：EXT1

Bit8：EXT2

Bit9：ENC1

Bit10：ENC2

Bit11：GPIO8

Among them, the direction of the emergency stop input port and the encoder input port is fixed as the input port and cannot be configured.

Note: GPIO0~GPIO5 is not led to the controller interface and is only for offline programming.

Subindex 0x02: IO port configuration

| Object type | U32,rw |
|---|---|
| Range | 0-0x3fffff |
| Default value | 0 |

Each port is configured by 2 bits. If the IO port is configured as a input port, the meaning of the value is as follows:

0：FLOATING

1：IPU

2：IPD

3：AIN

If the IO port is configured as a output port, the meaning of the value is as follows:

0：OD

1：PP

The definition of the IO port configuration is defined as follows:

Bit1-0：GPIO1

Bit3-2：GPIO2

Bit5-4：GPIO3

Bit7-6：GPIO4

Bit9-8：GPIO5

Bit11-10：GPIO6
Bit13-12：GPIO7
Bit15-14：EXT1
Bit17-16：EXT2
Bit19-18：EXT3/ENC1
Bit21-20：ENC2
Bit23-22：GPIO8

### 5.11.2 General IO port value

| Object name | General IO port value |
|---|---|
| Instruct address | 0x6012 |
| Object type | U16,rw |
| Range | bit |
| Storage type | RAM |
| Default value | 0 |

The value of each IO port is represented by 1bit, 1 indicates a high level, 0 indicates a low level, and writing value to the port is not valid for the input port. The meaning of each bit is as follows:

Bit0：GPIO1 value
Bit1：GPIO2 value
Bit2：GPIO3 value
Bit3：GPIO4 value
Bit4：GPIO5 value
Bit5：GPIO6 value
Bit6：GPIO7 value
Bit7：EXT1 value
Bit8：EXT2 value
Bit9：EXT3/ENC1 value
Bit10：ENC2 value
Bit11：GPIO8 value

## 5.12 Closed-loop parameter

PMC006C1 supports 200-8000PPR incremental photoelectric encoder and uses PID to realize closed loop control.

### 5.12.1 Encoder resolution

| Object name | Encoder resolution |
|---|---|
| Instruct address | 0x6021 |
| Object type | U16,rw |
| Range | Incremental encoder closed loop:<br>200,400,500,600,800,1000,1200,1600,2000,4000,8000<br>Absolute encoder closed loop:14 |

| | |
|---|---|
| Storage type | ROM |
| Default value | 1000/4000,14 |

Note: After changing the encoder resolution, the power of controller must be re-energize.

PPR: Encoder Accuracy/Number of Lines/Resolution

CPR: Encoder count

CPR = PPR * 4 CPR is the number of steps per lap.

### 5.12.2 KP parameter

| | |
|---|---|
| Object name | KP parameter |
| Instruct address | 0x6023 |
| Object type | U8,rw |
| Range | 1-255 |
| Storage type | ROM |
| Default value | 48 |

This parameter affects the transient response characteristic of the system.

### 5.12.3 KI parameter

| | |
|---|---|
| Object name | KI parameter |
| Instruct address | 0x6024 |
| Object type | U8,rw |
| Range | 1-255 |
| Storage type | ROM |
| Default value | 8 |

This parameter affects the cumulative error characteristics of the system.

### 5.12.4 KD parameter

| | |
|---|---|
| Object name | KD parameter |
| Instruct address | 0x6025 |
| Object type | U8,rw |
| Range | 1-255 |
| Storage type | ROM |
| Default value | 25 |

This parameter affects the transient response characteristic of the system.

### 5.12.5 Pre-filtering parameter

| | |
|---|---|
| Object name | Pre-filtering parameter |
| Instruct address | 0x6026 |
| Object type | U8,rw |
| Range | 1-128 |
| Storage type | ROM |
| Default value | 40 |

This parameter affects the speed characteristics of the system, you don't need to modify

the default values.

In high-speed torque mode, it can be used as a switch and setting value for the guidance correction function.

### 5.12.6 Post-filtering parameter

| Object name | Post-filtering parameter |
|---|---|
| Instruct address | 0x6027 |
| Object type | U16,rw |
| Range | 1-65535 |
| Storage type | ROM |
| Default value | 1330 |

This parameter is reserved for the time being.

### 5.12.7 Stall length parameter

| Object name | Stall length parameter |
|---|---|
| Instruct address | 0x6028 |
| Object type | U16,rw |
| Range | 1-32768 |
| Storage type | ROM |
| Default value | 640 |

The threshold for stalling judgment: the higher the value, the lower the sensitivity or the harder it is to detect a stall.

## 5.13 High-speed torque mode switch

| Object name | High-speed torque mode switch |
|---|---|
| Instruct address | 0x6029 |
| Object type | U8,rw |
| Range | 0-1 |
| Storage type | ROM |
| Default value | 0 |

## 5.14 Open loop application switch

| Object name | Open loop application switch |
|---|---|
| Instruct address | 0x6015 |
| Object type | U32,rw |
| Range | 0-1 |
| Storage type | ROM |
| Default value | 0 |

Write a value to the register, and write a power-down save instruction before it takes effect, and after the effect, it will block the encoder reading, and use an open-loop method to control the motor operation. Often used in emergencies. The closed-loop version works.

## 5.15 PP mode

Set the working mode to 4 to PP mode(Profile Position Mode), which adopts trapezoidal acceleration and deceleration, and can set the start speed, stop speed, acceleration, deceleration, running speed and target position independently. In the process of PP mode operation, the host computer can be received to write a new set of parameters, and finally by writing the control word to let the controller run smoothly from the previous motion parameters to the new parameters, or after the old parameters are completed, and then run with the new parameters.

### 5.15.1 PP mode parameter 1

PP mode parameter 1 is the ROM parameter, which can be saved by power off

| Object name | PP mode parameter 1 |
|---|---|
| Instruct address | 0x602d |
| Object type | Record |
| Storage type | ROM |
| Reference number | 4 |

Sub-index 0x01: pp acceleration, unit pps/s

| Object type | U32,rw |
|---|---|
| Unit | Normal mode pps/s<br>High speed mode 0.1lines/ms |
| Range | Normal mode>150<br>High speed mode>0 |
| Default value | Normal mode 32000<br>High speed mode 50 |

Sub-index 0x02: pp deceleration, unit pps/s

| Object type | U32,rw |
|---|---|
| Unit | Normal mode pps/s<br>High speed mode 0.1lines/ms |
| Range | Normal mode>150<br>High speed mode>0 |
| Default value | Normal mode 32000<br>High speed mode 50 |

Sub-index 0x03: pp start speed

| Object type | U32,rw |
|---|---|
| Unit | Normal mode pps/s<br>High speed mode 0.1lines/ms |
| Range | Normal mode>150<br>High speed mode>20 |

| | |
|---|---|
| Default value | 600 |

Recommend to use the default value in normal mode, the setting value should not be lower than 600.

Sub-index 0x04: pp stop speed

| | |
|---|---|
| Object type | U32,rw |
| Unit | Normal mode pps/s<br>High speed mode 0.1lines/ms |
| Range | Normal mode>150<br>High speed mode>20 |
| Default value | 600 |

Recommend to use the default value in normal mode, the setting value should not be lower than 600.

### 5.15.2 PP mode parameter 2

PP mode parameter 2 is the RAM parameter, which is reset to the default value after power-up.

| | |
|---|---|
| Object name | PP mode parameter 2 |
| Instruct address | 0x602e |
| Object type | Record |
| Storage type | ROM |
| Reference number | 4 |

Sub-index 0x01: control word

| | |
|---|---|
| Object type | U16,rw |
| Range | 0-0xFFFF |
| Default value | 0 |

The function description for Control word object (602e,1)：

• Bit 4: Start the running task. When the value is converted from "0" to "1", the run task is executed. Example value: 0x10

• Bit 5: When the bit is set to "1", the run task triggered by bit 4 is executed immediately. If the bit is set to "0", the running task that is being executed will be completed before the next run task is started. Example value: 0x30

• Bit 6: The target position (602e,4) is the absolute position when the value is set to "1", and the target position is the relative position when the value is set to "0". Example value: 0x50 or 0x70

• Bit 8 (Halt): This bit is applied in PV mode, when the value of this bit changes from "1" to "0", the motor will accelerate to the target speed with a preset starting ramp. When the value of

this bit changes from "0" to "1", the motor will slow down and stop moving.

• Bit 9: When the bit is set, the speed will change after reaching the first target position. That is, the braking is not performed until the first target is reached, since the motor should not stop in that position.

Sub-index 0x02: status word

| | |
|---|---|
| Object type | U16,rw |
| Range | 0-0xFFFF |
| Default value | 0 |

The following bits in the state word object (602e,2) have special functions:

• Bit 10: When the final target has been reached, the bit will be set to "1" and the position is in place.

• Bit 12: This bit acknowledges receipt of a valid new target point. The bit will be set and reset synchronously with the bit "New Target Point" in the control word.

Subindex 0x03: running speed, the symbol represents the direction of rotation, the positive sign rotates positively, and the negative sign reverses

| | |
|---|---|
| Object type | S32,rw |
| Unit | Normal mode pps<br>High speed mode 0.1lines/ms |
| Range | -300000- -150,150-300000 |
| Default value | 32000 |

Subindex 0x04: PP Model Target Location

| | |
|---|---|
| Object type | S32,rw |
| Range | -2^31~2^31 |
| Default value | 0 |

Running tasks with a speed of 0 or a run length of 0 will receive an error.

### 5.15.3 PP model work timing

A new target position is set in the target position object (602e,4). Next, the bit 4 in the control word object (602e,1) is set for trigger the operation command. If the target location is valid, the controller will reply through the bit 12 in the object status word to locate the start of the operation. When the location is reached, the bit 10 in the status word will immediately set to a "1".

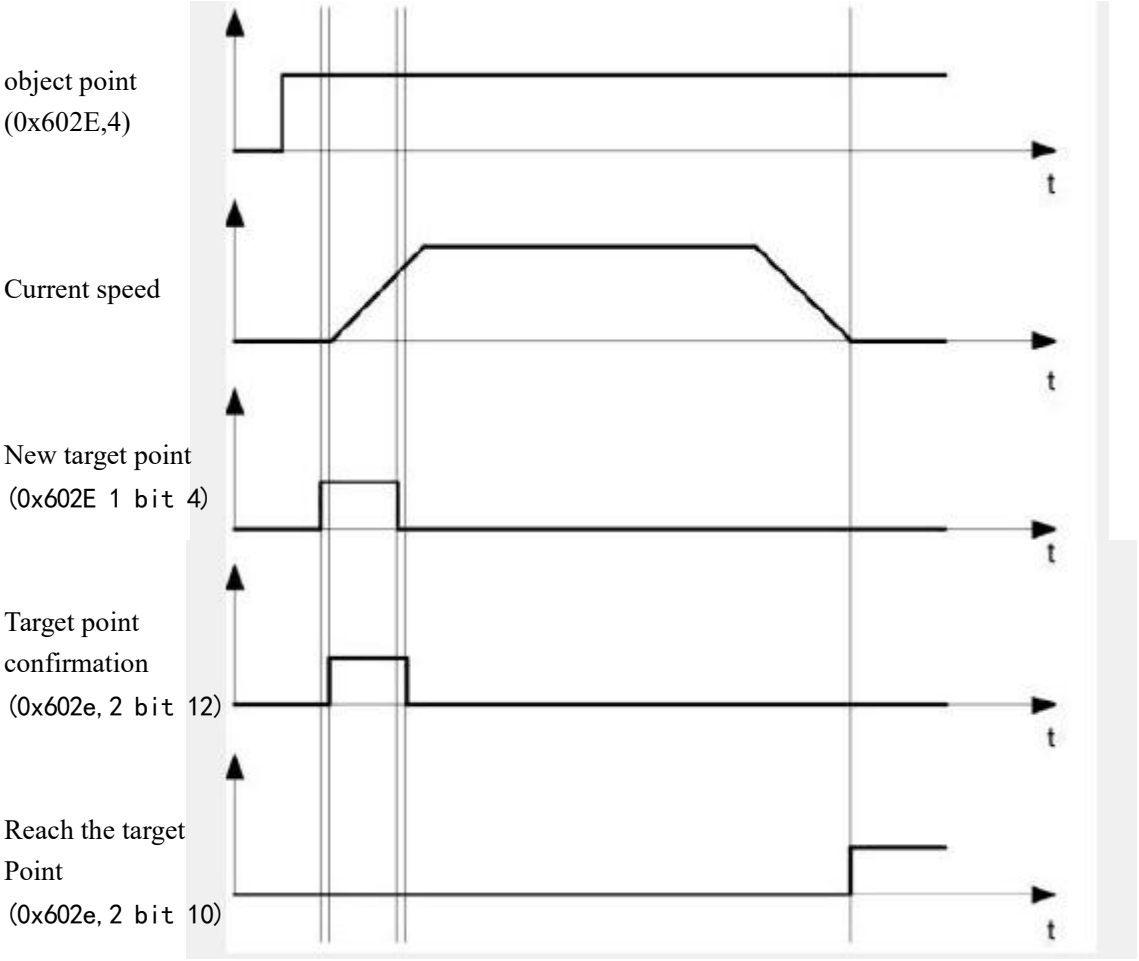


Other running commands can be stored in the cache (see point in time 1 in the figure below), and bit 12 in the status word object (602e, 2 sets the target point response) will be set to "0". During the motion to the target position, a second target position can be sent to the controller to prepare for it. At this point, you can reset all parameters, such as velocity, acceleration, deceleration, etc. (point in time 2). If the cache is idle again, the next point in time can enter the queue (point in time 3).

If the cache is full, the new target point will be ignored (point in time 4). If bit 5 in the control word object (602e, 1 bit: "change the target point now") is set, the controller will not use cache when working, and the new running command will be executed directly (point in time 5).

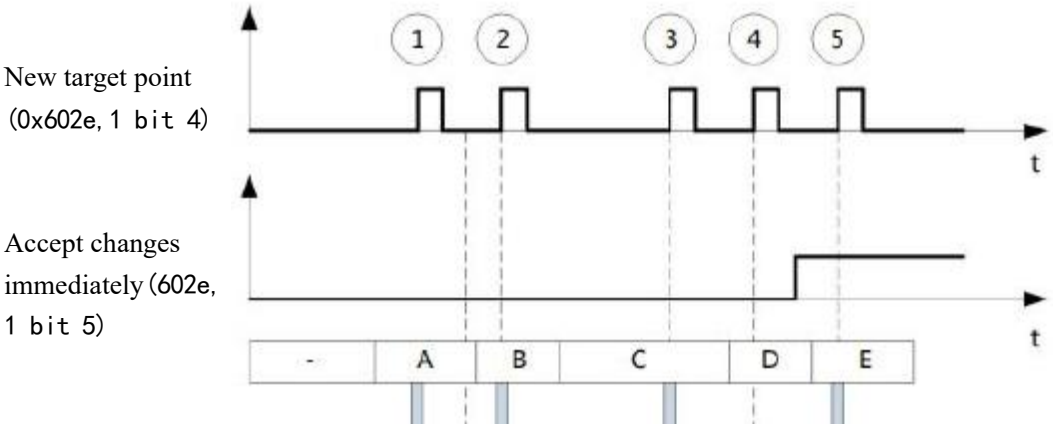

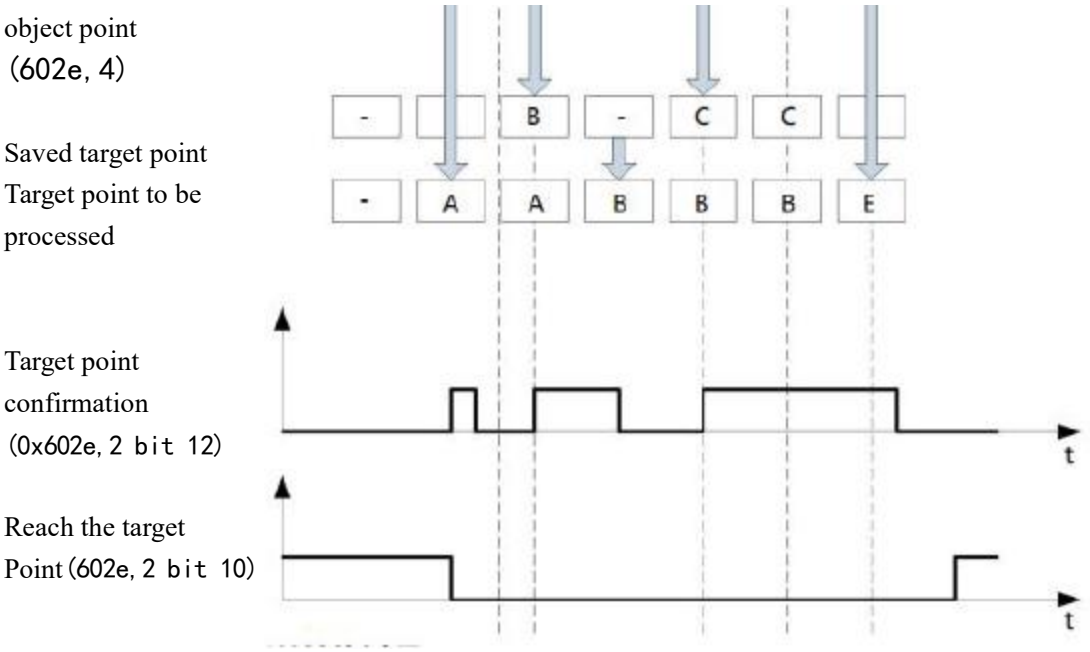


The conversion process of the second target position:

The following figure shows the conversion process of the second target position when moving to the first target position. In this figure, the bit 5 of the control word object (602e, 1) is set to "1" and the new target value will be accepted immediately.

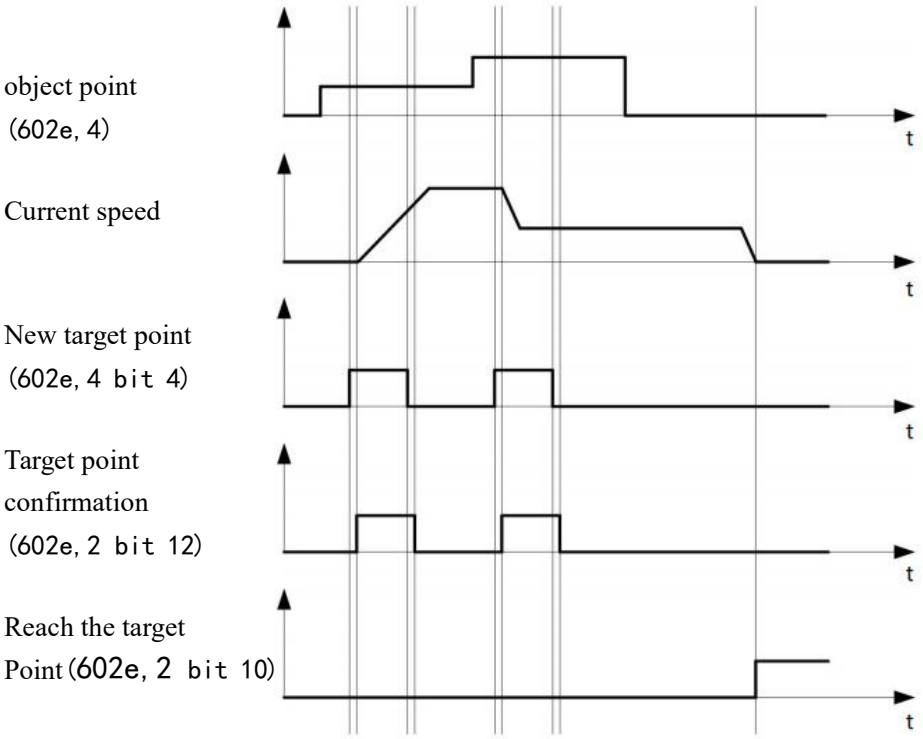


The method of moving to the target position:

If the bit 9 in the control word object (602e,1) is a "0", it will first fully travel to the current target position. In this example, the final speed of the first target position is equal to zero. If bit 9

is set to "1", the final speed will be maintained until the target position is reached, and then the newly set motion parameters will take effect.

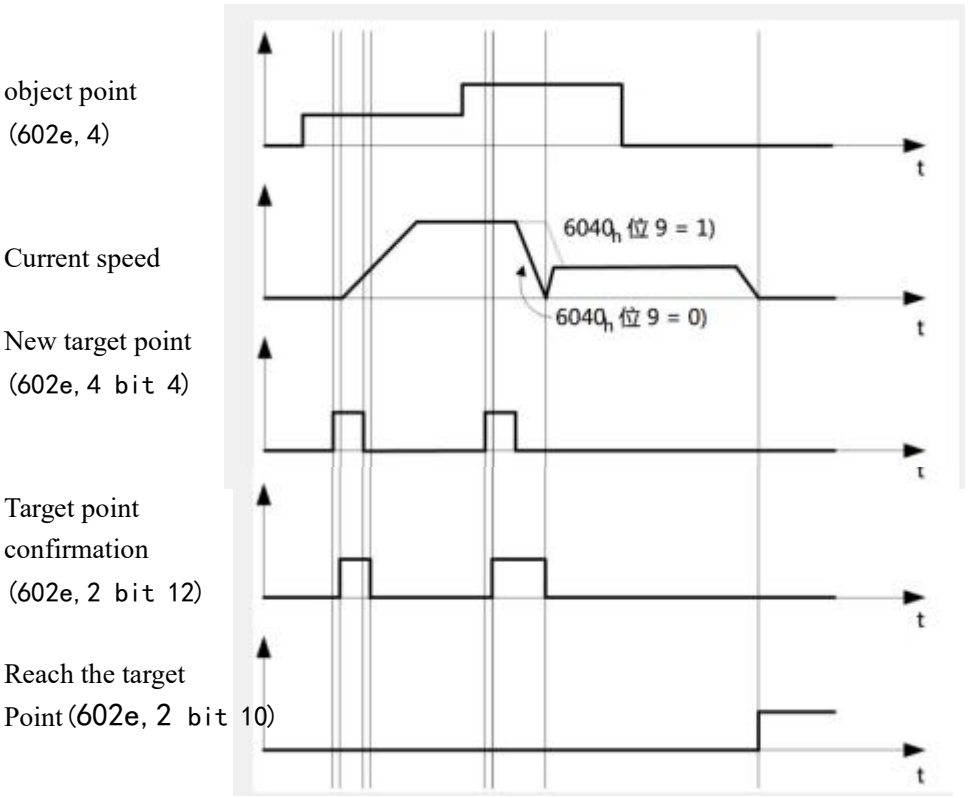


## 5.16 Synchronous position Motion mode

| Object name | Synchronous position Motion control |
|---|---|
| Instruct address | 0x601D |
| Object type | Record |
| Storage type | RAM |
| Default value | 2 |

The synchronous positioning motion mode is the method of absolute immediate execution of the PP mode, by sending broadcast commands, so that the control in the specified group has set the task, and the synchronous stop is also used in the same way.

Before use, you need to switch the running mode to PP mode, set the group (group ID, 2006H) of the controller to be run to a unified value, and then write the running speed and absolute position in the registers of the synchronous positioning speed and synchronous positioning position, that is, set the motion task. After the setting is completed, the NMT broadcast command to let the specified group of controllers run synchronously.

### 5.16.1 SP speed

Sub-index 0x01: Synchronized location speed

| Object type | S32,rw |
|---|---|
| Range | -2147483648-2147483647 |
| Default value | 0 |

### 5.16.2 SP position

Sub-index 0x02: Synchronized location position

| | |
|---|---|
| Object type | S32,rw |
| Range | -2147483648-2147483647 |
| Default value | 0 |

### 5.16.3 Synchronous start and stop

PMC006C1 is an extension of the NMT instructions of the standard CANOpen to realize the synchronous start and stop of two or more nodes in a network.

Standard NMT format

| COB-ID | Byte0 | Byte1 |
|---|---|---|
| 0x000 | CS | Node-ID |

The expanded NMT directive adds new definitions of Byte0 and Byte1 without affecting the standard protocol.

Byte0 is defined as follows:

| Command | Function |
|---|---|
| 10 | Start the synchronous positioning movement |

Byte1 is the group ID, and the corresponding command operation will be executed only when the group ID received by the controller matches its own group ID. Start using NMT command to send, the first data is the function command, 10 is the start synchronous positioning, so the first parameter is 0A, the second parameter is the group id, if it is 1, it is 01.cob-id is 000.

Taking site 3 as an example, the sending instruction is set to run synchronously:

| | | |
|---|---|---|
| Set group ID | 603 | 2f 06 20 00 01 00 00 00 |
| Set sport mode | 603 | 2f 05 60 00 04 00 00 00 |
| Set the synchronous positioning speed | 603 | 23 1d 60 01 00 7d 00 00 |
| Set the synchronous location | 603 | 23 1d 60 02 00 7d 00 00 |
| Start the synchronous motion | 000 | 0A 01 |

## 5.17 Analog parameters

The PMC006C1 has an analog signal input port and uses a 12-bit ADC internally. It can be configured into analog mode through software. First, set the analog-related parameters, and enable the analog function. Below is a detailed description of the analog-related features.

| | |
|---|---|
| Object name | Analog settings |
| Instruct address | 0x602f |
| Object type | Record |
| Storage type | ROM |

| | |
|---|---|
| Reference number | 6 |

### 5.17.1 Analog enabled

Subindex 0x01: Analog Enable, 1 On, 0 Off

| | |
|---|---|
| Object type | U8, rw |
| Range | 0,1 |
| Default value | 0 |

### 5.17.2 Analog start_adc

Subindex 0x02: Analog start_adc: Adjust when the analog signal curve drifts

| | |
|---|---|
| Object type | U16, rw |
| Range | 0-4095 |
| Default value | 0 |

### 5.17.3 Analog end_adc

Subindex 0x03: Analog end_adc: Adjust when the analog signal curve drifts

| | |
|---|---|
| Object type | U16,rw |
| Range | 0-4095 |
| Default value | 0 |

### 5.17.4 Analog adjustment lower limit

Subindex 0x04: Analog adjustment lower limit: It only starts adjusting when the analog value is above this threshold; when it's below, it keeps the minimum speed or position.

| | |
|---|---|
| Object type | U16,rw |
| Range | 0-4095 |
| Default value | 0 |

### 5.17.5 Analog adjustment upper limit

Subindex 0x05: Analog adjustment upper limit: Stop adjusting when the analog value exceeds this value, and keep the maximum speed or maximum position when it’s above this value

| | |
|---|---|
| Object type | U16, rw |
| Range | 0-4095 |
| Default value | 0 |

### 5.17.6 Analog Adjustment Interval

Subindex 0x06: Analog adjustment interval, unit ms.

The controller checks the analog input value at this interval. If the difference between the current AD input value and the previous input value exceeds the trigger threshold, it will do a

position adjustment.

| | |
|---|---|
| Object type | U16, rw |
| Range | 0-65535 |
| Default value | 100 |

### 5.17.7 Analog adjustment trigger value

Subindex 0x07: Analog adjustment trigger value. When the difference between the current AD code and the previous AD code, converted into position, is greater than this value, the controller will do a position adjustment.

| | |
|---|---|
| Object type | U16, rw |
| Range | 0-65535 |
| Default value | 30 |

### 5.17.8 Analog speed/position 1

Subindex 0x08: Speed/position corresponding to the starting AD code of the analog quantity

| | |
|---|---|
| Object type | S32, rw |
| Range | -2^31~2^31 |
| Default value | 0 |

### 5.17.9 Analog speed/position 2

Subindex 0x09: Speed/position corresponding to AD code 4095

| | |
|---|---|
| Object type | S32, rw |
| Range | -2^31~2^31 |
| Default value | 0 |

## 5. 18 offline programming

### 5.18.1 Offline programming parameter 1

| | |
|---|---|
| Object name | Offline programming parameter 1 |
| SDO ID | 0x6018 |
| Object type | Record |
| Storage type | ROM |
| Default value | 2 |

Sub-index 0x01: Number of offline programming data instructions

| | |
|---|---|
| Object type | U8, rw |
| Range | 0-100 |
| Default value | 0 |

Sub-index 0x02: Offline automatic operation enable

| | |
|---|---|
| Object type | U8, rw |
| Range | 0,1 |
| Default value | 0 |

Offline auto operation value definition:

0: Do not enable offline automatic operation

1: Enable offline automatic operation

### 5.18.2 Offline programming parameter 2

| | |
|---|---|
| Object name | Offline programming parameter 2 |
| SDO ID | 0x6019 |
| Object type | Record |
| Storage type | RAM |
| Default value | 5 |

Sub-index 0x01: Offline program pointer

| | |
|---|---|
| Object type | U8, rw |
| Range | 0-100 |
| Default value | 0 |

Sub-index 0x02: Offline command

| | |
|---|---|
| Object type | U32, rw |
| Range | - |
| Default value | - |

Offline instruction definitions are described in the User-Defined Programs section.

Sub-index 0x03: Save offline instructions

| | |
|---|---|
| Object type | U8, rw |
| Range | 0,1 |
| Default value | 0 |

Write 1 to save all the offline instructions

Sub-index 0x04: Run instructions

| | |
|---|---|
| Object type | U16, rw |
| Range | 0,1 |
| Default value | 0 |

Write 1 to the instruction pointed to by the pointer of the offline program

## 5.19 Analogue input read

The default voltage input is 0-3.3V, and special versions can support 4-20mA or 0-24V analog input, 12-bit ADC.

| | |
|---|---|
| Object name | Analogue input |

| | |
|---|---|
| SDO ID | 0x602B |
| Object type | U16,rw |
| Range | 0~4095 |
| Storage type | RAM |
| Default value | 0 |

## 5.20 Step notification

The controller can set the step notification in position mode or speed mode, that is, when the motor movement reaches a certain set position in a step, the controller can report the step to position notification through TPDO, and supports two step notification position points.

| | |
|---|---|
| Object name | Step notification |
| SDO ID | 0x602C |
| Object type | Record |
| Storage type | RAM |
| Default value | 3 |

Sub-index 0x01: Step notification status

| | |
|---|---|
| Object type | U8, rw |
| Range | bit |
| Default value | 0 |

The direction of each IO port is represented by 1 bit, 0 is the input, 1 is the output, and the meaning is as follows:

Bit0: Step notification position point 1 is valid;

Bit1: Step notification position point 2 is valid;

The object can be mapped to the TPDO, and when the object value changes, it will be automatically reported to the host computer.

Sub-index 0x02: Step notification position1(absolute setting) setting

| | |
|---|---|
| Object type | S32, rw |
| Range | −2147483647 ~ +2147483647 |
| Default value | 0 |

Sub-index 0x03: Step notification position2(absolute setting) setting

| | |
|---|---|
| Object type | S32, rw |
| Range | −2147483647 ~ +2147483647 |
| Default value | 0 |

## 5.21 Low-voltage protection

The controller detects the power loss of the system and can set the corresponding low voltage protection. The following describes the objects related to the low voltage protection settings in detail.

| Object name | low voltage protection setting |
|---|---|
| SDO ID | 0x6031 |
| Object type | Record |
| Storage type | ROM |
| Reference number | 3 |

### 5.21.1 Low-voltage protection control word

Sub-index 0x01: low voltage protection control switch

| Object type | U16, rw |
|---|---|
| Range | bit |
| Default value | 0 |

Bit0: Offline when the input supply voltage is detected to be below the set value

Bit1: Brake tightening when the input supply voltage is detected to be below the set value

If the corresponding bit bit is 1, it will be enabled, and if it is 0, it will be turned off.

### 5.21.2 Offline voltage threshold

Sub-index 0x02: Offline threshold voltage, unit mV

| Object type | U16, rw |
|---|---|
| Range | 0–65535 |
| Default value | 0 |

When the low-voltage offline enable is turned on, the motor goes off when the supply voltage is detected below this voltage.

## 5.22 Homing parameters

Homing requires first setting the homing direction, speed, and travel. After configuration, change the work mode to homing mode (write 6 to 6005h). The motor will start homing until EXT2 is triggered to stop, and the current position will be recorded as zero.

| Object name | Homing setting |
|---|---|
| SDO ID | 0x6010 |
| Object type | Record |
| Storage type | ROM |
| Reference number | 3 |

Sub-index 0x02: Homing direction, motor’s operation direction when homing

| Object type | U8, rw |
|---|---|
| Range | 0–1 |
| Default value | 0 |

Sub-index 0x11: Homing travel, motor homing distance

| Object type | U32, rw |
|---|---|
| Range | 0–0xFFFFFFFF |

| | |
|---|---|
| Default value | 0 |

Sub-index 0x12: Homing speed

| | |
|---|---|
| Object type | U32, rw |
| Range | 0–0xFFFFFFFF |
| Default value | 0 |

# 6 User-defined programs

PMC006C1 controller can be configured to work offline, in which the controller automatically executes user-defined program code after powering on, which is pre-compiled and programmed into EEPROM by CQPUSI tool software.

When the PMC006C1 controller is working offline, the CAN communication interface can still respond to the user's online instructions.

The maximum number of user instructions supported by PMC006CX controller is 100.

For detailed examples of user-defined programs, please refer to the Controller Custom Programming Guide.

# 7 Tool software operation introduction

PMC006C1 can be used for command debugging, IO port setting detection, stepper motor parameter debugging and custom programming through the CQPUSI tool software PUSICAN. The tool software usage process is tested, and details can be found in the "Pusican Operation Guide".

## 7.1 Graphic programming support

The PUSICAN debugging tool software supports graphical programming, adding process items through the interface, and setting relevant motion parameters to complete simple movements.

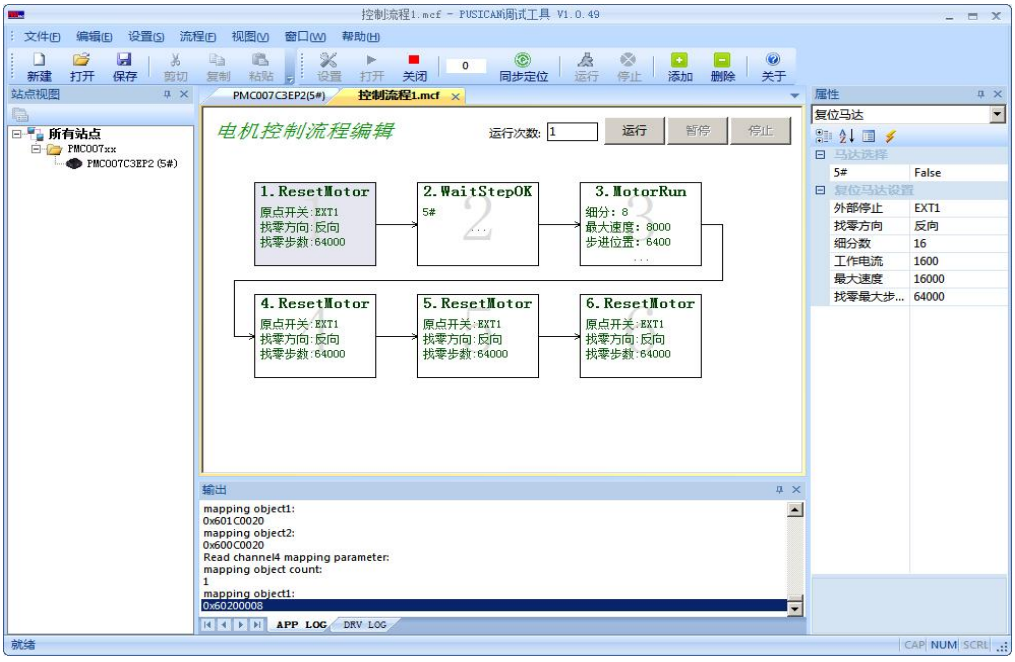

## 7.2 Scripting language support

PUSICAN debugging tool software supports LUA scripting language and has built-in CANOPEN SDO operation functions, which users can call directly in the script program. You can create or open a script file by clicking the "New" and "Open" icons in the upper left corner, and once the script program is written, you can control the program execution through the "Run" and "Stop" icons in the upper right corner. Figure 6-9 below.

The syntax of LUA scripting language is similar to that of C language, and in application scenarios without special UI interface requirements, users can easily complete complex control loop tasks with the help of the powerful functions of LUA scripting without developing the CANOPEN master program in the host computer.

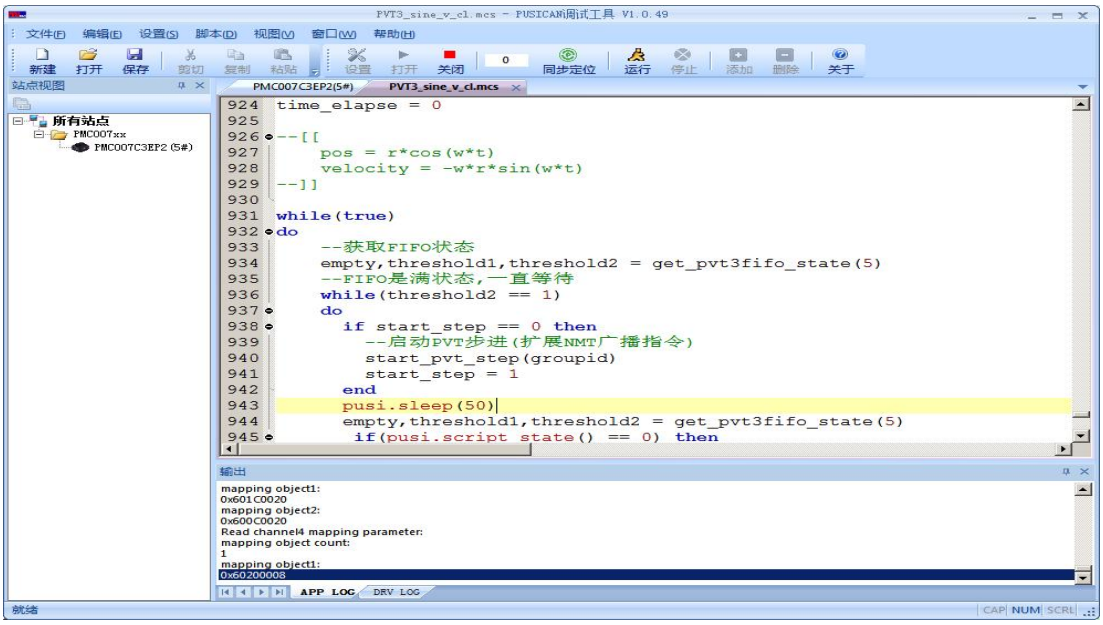


# 8 Electrical Characteristics

| Parameter | Condition | Min | Typical | Max | Unit |
|---|---|---|---|---|---|
| Input Voltage | Normal 25℃ | 9 | 24 | 36 | V |
| Operation Temperature | 24V input voltage | -40 | | 85 | ℃ |
| IO maximum current | source/sink current | 0 | | 20 | mA |
| Output current | Normal 25℃ | 0 | 2.5 | 3 | A |

# 9 Dimensions (Unit: mm)

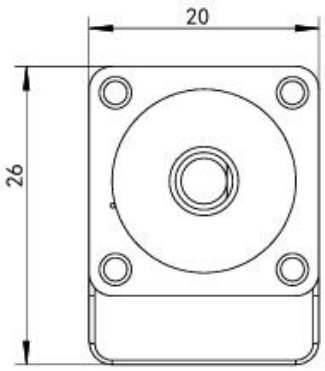
20
26

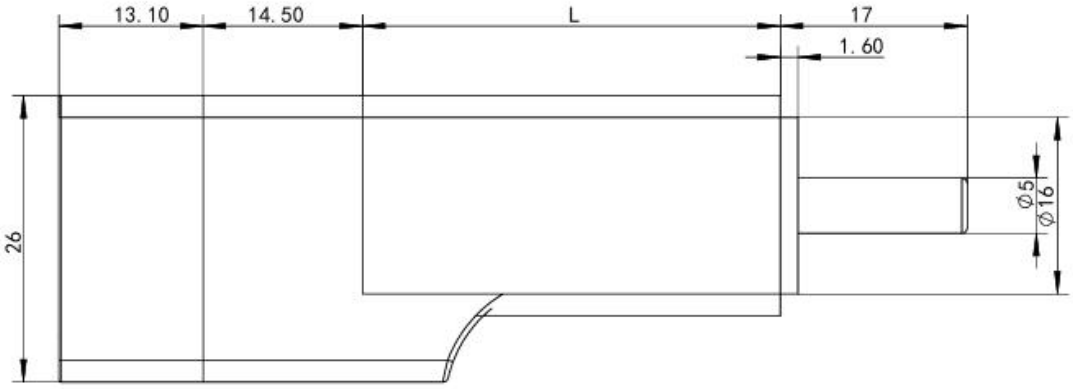
13.10
14.50
L
17
1.60
26
Ø5
Ø16

# 10 Appendix 1 PMC006C1 Object dictionary table

| Index | Sub index | Object type | Name | Type | Attr. | PDO | Storage type |
|---|---|---|---|---|---|---|---|
| 1000h | -- | VAR | Device type | UINT32 | RO | NO | ROM |
| 1001h | -- | VAR | Error registor | UINT8 | RO | Optional | RAM |
| 1002h | -- | VAR | manufacturer status register | UINT32 | RO | Optional | RAM |
| 1003h | -- | ARRAY | pre-defined error field | -- | -- | -- | RAM |
| | 0h | | number of errors | UINT8 | | NO | |
| | 1h-7h | | standard error field | | | Optional | |
| 1005h | -- | VAR | COB-ID SYNC | UINT32 | RW | NO | ROM |
| 1006h | -- | VAR | communication cycle period | UINT32 | RW | NO | ROM |
| 1007h | -- | VAR | synchronous window length | UINT32 | RW | Optional | ROM |
| 1008h | -- | VAR | manufacturer device name | Visible String | const | NO | ROM |
| 1009h | -- | VAR | manufacturer hardware version | Visible String | const | NO | ROM |
| 100ah | -- | VAR | manufacturer software version | Visible String | const | NO | ROM |
| 1014h | -- | VAR | COB-ID Emergency message | UINT32 | RO | NO | ROM |
| 1015h | -- | VAR | Inhibit Time EMCY | UINT16 | RW | NO | ROM |
| 1016h | -- | ARRAY | Consumer Heartbeat Time | -- | -- | -- | ROM |
| | 0h | | number entries | UINT8 | RO | NO | |
| | 1h-3h | | Consumer Heartbeat Time | UINT32 | RW | NO | |
| 1017h | -- | VAR | Producer Heartbeat Time | UINT16 | RW | NO | ROM |
| 1018h | -- | RECORD | Identity Object | -- | -- | -- | ROM |
| | 0h | | number of entries | UINT8 | RO | NO | |
| | 1h | | Vendor ID | UINT32 | RO | NO | |
| | 2h | | Product code | UINT32 | RO | NO | |
| | 3h | | Revision number | UINT32 | RO | NO | |
| | 4h | | Serial number | UINT32 | RO | NO | |
| 1200h | -- | RECORD | Server SDO parameter | -- | -- | -- | ROM |
| | 0h | | number of entries | UINT8 | RO | NO | |
| | 1h | | COB-ID Client->Server (rx) | UINT32 | RO | NO | |

| | | | | | | | |
|---|---|---|---|---|---|---|---|
| | 2h | | COB-ID Server -> Client (tx) | UINT32 | RO | NO | |
| | 3h | | Node-ID of the SDO client | UINT32 | RW | NO | |
| 1280h | -- | RECORD | Client SDO parameter | -- | -- | -- | RAM |
| | 0h | | number of entries | UINT8 | RO | NO | |
| | 1h | | COB-ID Client->Server (tx) | UINT32 | RW | NO | |
| | 2h | | COB-ID Server -> Client (rx) | UINT32 | RW | NO | |
| | 3h | | Node-ID of the SDO server | UINT32 | RW | NO | |
| 1400h | -- | RECORD | receive PDO parameter | -- | -- | -- | ROM |
| | 0h | | largest sub-index supported | UINT8 | RO | NO | |
| | 1h | | COB-ID used by PDO | UINT32 | RW | NO | |
| | 2h | | transmission type | UINT8 | RW | NO | |
| | 3h | | inhibit time | UINT16 | RW | NO | |
| | 4h | | compatibility entry | UINT8 | RW | NO | |
| | 5h | | event timer | UINT16 | RW | NO | |
| 1401h | -- | RECORD | receive PDO parameter | -- | -- | -- | ROM |
| | 0h | | largest sub-index supported | UINT8 | RO | NO | |
| | 1h | | COB-ID used by PDO | UINT32 | RW | NO | |
| | 2h | | transmission type | UINT8 | RW | NO | |
| | 3h | | inhibit time | UINT16 | RW | NO | |
| | 4h | | compatibility entry | UINT8 | RW | NO | |
| | 5h | | event timer | UINT16 | RW | NO | |
| 1402h | -- | RECORD | receive PDO parameter | -- | -- | -- | ROM |
| | 0h | | largest sub-index supported | UINT8 | RO | NO | |
| | 1h | | COB-ID used by PDO | UINT32 | RW | NO | |
| | 2h | | transmission type | UINT8 | RW | NO | |
| | 3h | | inhibit time | UINT16 | RW | NO | |
| | 4h | | compatibility entry | UINT8 | RW | NO | |
| | 5h | | event timer | UINT16 | RW | NO | |
| 1403h | -- | RECORD | receive PDO parameter | -- | -- | -- | ROM |
| | 0h | | largest sub-index supported | UINT8 | RO | NO | |
| | 1h | | COB-ID used by PDO | UINT32 | RW | NO | |
| | 2h | | transmission type | UINT8 | RW | NO | |
| | 3h | | inhibit time | UINT16 | RW | NO | |

| | | | | | | | |
|---|---|---|---|---|---|---|---|
| | 4h | | compatibility entry | UINT8 | RW | NO | |
| | 5h | | event timer | UINT16 | RW | NO | |
| 1600h | -- | RECORD | receive PDO mapping | -- | -- | -- | ROM |
| | 0h | | number of mapped application objects in PDO | UINT8 | RO | NO | |
| | 1h-8h | | PDO mapping for the nth application object to be mapped | UINT32 | RW | NO | |
| 1601h | -- | RECORD | receive PDO mapping | -- | -- | -- | ROM |
| | 0h | | number of mapped application objects in PDO | UINT8 | RO | NO | |
| | 1h-8h | | PDO mapping for the nth application object to be mapped | UINT32 | RW | NO | |
| 1602h | -- | RECORD | receive PDO mapping | -- | -- | -- | ROM |
| | 0h | | number of mapped application objects in PDO | UINT8 | RO | NO | |
| | 1h-8h | | PDO mapping for the nth application object to be mapped | UINT32 | RW | NO | |
| 1603h | -- | RECORD | receive PDO mapping | -- | -- | -- | ROM |
| | 0h | | number of mapped application objects in PDO | UINT8 | RO | NO | |
| | 1h-8h | | PDO mapping for the nth application object to be mapped | UINT32 | RW | NO | |
| 1800h | -- | RECORD | transmit PDO parameter | -- | -- | -- | ROM |
| | 0h | | largest sub-index supported | UINT8 | RO | NO | |
| | 1h | | COB-ID used by PDO | UINT32 | RW | NO | |
| | 2h | | transmission type | UINT8 | RW | NO | |
| | 3h | | inhibit time | UINT16 | RW | NO | |
| | 4h | | reserved | UINT8 | RW | NO | |
| | 5h | | event timer | UINT16 | RW | NO | |
| 1801h | -- | RECORD | transmit PDO parameter | -- | -- | -- | ROM |
| | 0h | | largest sub-index supported | UINT8 | RO | NO | |

| | | | | | | | |
|---|---|---|---|---|---|---|---|
| | 1h | | COB-ID used by PDO | UINT32 | RW | NO | |
| | 2h | | transmission type | UINT8 | RW | NO | |
| | 3h | | inhibit time | UINT16 | RW | NO | |
| | 4h | | reserved | UINT8 | RW | NO | |
| | 5h | | event timer | UINT16 | RW | NO | |
| 1802h | -- | RECORD | transmit PDO parameter | -- | -- | -- | ROM |
| | 0h | | largest sub-index supported | UINT8 | RO | NO | |
| | 1h | | COB-ID used by PDO | UINT32 | RW | NO | |
| | 2h | | transmission type | UINT8 | RW | NO | |
| | 3h | | inhibit time | UINT16 | RW | NO | |
| | 4h | | reserved | UINT8 | RW | NO | |
| | 5h | | event timer | UINT16 | RW | NO | |
| 1803h | -- | RECORD | transmit PDO parameter | -- | -- | -- | ROM |
| | 0h | | largest sub-index supported | UINT8 | RO | NO | |
| | 1h | | COB-ID used by PDO | UINT32 | RW | NO | |
| | 2h | | transmission type | UINT8 | RW | NO | |
| | 3h | | inhibit time | UINT16 | RW | NO | |
| | 4h | | reserved | UINT8 | RW | NO | |
| | 5h | | event timer | UINT16 | RW | NO | |
| 1a00h | -- | RECORD | transmit PDO mapping | -- | -- | -- | ROM |
| | 0h | | number of mapped application objects in PDO | UINT8 | RO | NO | |
| | 1h-8h | | PDO mapping for the n-th application object to be mapped | UINT32 | RW | NO | |
| 1a01h | -- | RECORD | transmit PDO mapping | -- | -- | -- | ROM |
| | 0h | | number of mapped application objects in PDO | UINT8 | RO | NO | |
| | 1h-8h | | PDO mapping for the n-th application object to be mapped | UINT32 | RW | NO | |
| 1a02h | -- | RECORD | transmit PDO mapping | -- | -- | -- | ROM |
| | 0h | | number of mapped application objects in PDO | UINT8 | RO | NO | |

| | | | | | | | |
|---|---|---|---|---|---|---|---|
| | 1h-8h | | PDO mapping for the n-th application object to be mapped | UINT32 | RW | NO | |
| 1a03h | -- | RECORD | transmit PDO mapping | -- | -- | -- | ROM |
| | 0h | | number of mapped application objects in PDO | UINT8 | RO | NO | |
| | 1h-8h | | PDO mapping for the n-th application object to be mapped | UINT32 | RW | NO | |
| 2002h | -- | VAR | Node ID | UINT8 | RW | NO | ROM |
| 2003h | -- | VAR | Baud rate | UINT8 | RW | NO | ROM |
| 2006h | -- | VAR | Group ID | UINT8 | RW | NO | ROM |
| 2007h | -- | VAR | System control | UINT8 | RW | NO | RAM |
| 6000h | -- | VAR | Error state | UINT8 | RW | Optional | RAM |
| 6001h | -- | VAR | Controller status | UINT8 | RW | Optional | RAM |
| 6002h | -- | VAR | Rotation direction | UINT8 | RW | NO | RAM |
| 6003h | -- | VAR | Max speed | UINT32 | RW | NO | RAM |
| 6004h | -- | VAR | Step command | UINT32 | RW | NO | RAM |
| 6005h | -- | VAR | Operation mode | UINT8 | RW | NO | RAM |
| 6006h | -- | VAR | Start speed | UINT16 | RW | NO | ROM |
| 6007h | -- | VAR | Stop speed | UINT16 | RW | NO | ROM |
| 6008h | -- | VAR | Acceleration coefficient | UINT8 | RW | NO | ROM |
| 6009h | -- | VAR | Deceleration coefficient | UINT8 | RW | NO | ROM |
| 600ah | -- | VAR | Microstepping | UINT16 | RW | NO | ROM |
| 600bh | -- | VAR | Max phase current | UINT16 | RW | NO | ROM |
| 600ch | -- | VAR | Motor position | UINT32 | RW | Optional | RAM |
| 600dh | -- | VAR | Current attenuation | UINT8 | RW | NO | ROM |
| 600eh | -- | VAR | Motor enable | UINT8 | RW | NO | RAM |
| 600fh | -- | RECORD | External emergency stop | UINT8 | RW | NO | ROM |
| | 0h | | The number of parameters | UINT8 | RO | NO | ROM |
| | 1h | | External emergency stop enable | UINT8 | RW | NO | RAM |
| | 2h | | Trigger mode of external emergency stop | UINT8 | RW | NO | RAM |
| | 3h | | Sensor type | UINT8 | RW | NO | RAM |

| | | | | | | | |
|---|---|---|---|---|---|---|---|
| 6010h | -- | RECORD | Homing setting | -- | -- | -- | RAM |
| | 2h | | Homing direction | UINT8 | RW | NO | RAM |
| | 11h | | Homing travel | UINT32 | RW | NO | RAM |
| | 12h | | Homing speed | UINT32 | RW | NO | RAM |
| 6011h | -- | RECORD | GPIO parameter | -- | -- | -- | ROM |
| | 0h | | The number of GPIO parameters | UINT8 | RO | NO | |
| | 1h | | GPIO direction | UINT16 | RW | NO | |
| | 2h | | GPIO configuration | UINT32 | RW | NO | |
| 6012h | -- | VAR | GPIO value | UINT16 | RW | Optional | RAM |
| 6015h | -- | VAR | Open loop application switch | UINT8 | RW | NO | ROM |
| 6016h | -- | VAR | Brake control | UINT8 | RW | NO | RAM |
| 6017h | | | Stall parameter(open loop) | UINT8 | RW | | ROM |
| 6018h | -- | RECORD | Off-line programming parameter 1 | -- | -- | -- | ROM |
| | 0h | | Number of Off-line programming parameter 1 | UINT8 | RO | NO | |
| | 1h | | Total number of offline programming command | UINT8 | RW | NO | |
| | 2h | | Offline operation enable automatically | UINT8 | RW | NO | |
| 6019h | -- | RECORD | Off-line programming parameter 2 | -- | -- | -- | RAM |
| | 0h | | Number of Off-line programming parameter 2 | UINT8 | RO | NO | |
| | 1h | | Off-line parameter pointer | UINT8 | RW | NO | |
| | 2h | | Off-line command | UINT32 | RW | NO | |
| | 3h | | Offline command preservation | UINT8 | RW | NO | |
| | 4h | | Run current command | UINT8 | RW | NO | |
| 601ah | -- | VAR | Jitter delay of external emergency stop | UINT16 | RW | NO | ROM |
| 601bh | -- | VAR | Locked-Rotor configuration | UINT8 | RW | NO | ROM |
| 601ch | -- | VAR | Absolute position step | INT32 | RW | NO | RAM |
| 601dh | -- | RECORD | PV step | -- | -- | -- | RAM |
| | 0h | | The number of PV step | UINT8 | RO | NO | |

| | | | | | | | |
|---|---|---|---|---|---|---|---|
| | | | parameter | | | | |
| | 1h | | PV speed | INT32 | RW | NO | |
| | 2h | | PV position | INT32 | RW | NO | |
| 6020h | -- | VAR | Termination step | UINT8 | RW | NO | RAM |
| 6021h | -- | VAR | Encoder CPR | UINT16 | RW | NO | ROM |
| 6022h | -- | VAR | Position saving value power-down | INT32 | RO | NO | ROM |
| 6023h | -- | VAR | Closed-loop parameter KP | UINT8 | RW | NO | ROM |
| 6024h | -- | VAR | Closed-loop parameter KI | UINT8 | RW | NO | ROM |
| 6025h | -- | VAR | Closed-loop parameter KD | UINT8 | RW | NO | ROM |
| 6026h | -- | VAR | Closed-loop Pre-filter parameter | INT8 | RW | NO | ROM |
| 6027h | -- | VAR | Closed-loop post-filter parameter | INT16 | RW | NO | ROM |
| 6028h | -- | VAR | Closed-loop stall length | INT16 | RW | NO | ROM |
| 6029h | -- | VAR | Enable closed-loop torque loop | UINT8 | RW | NO | ROM |
| 602Ah | -- | VAR | Enable saving automatically when power is off | UINT8 | RW | NO | ROM |
| 602Bh | -- | VAR | Analogue input | UINT16 | RW | Optional | RAM |
| 602Ch | -- | RECORD | Step notification | -- | -- | -- | RAM |
| | 0h | | Number of parameters | UINT8 | RO | NO | |
| | 1h | | Step notification status | UINT8 | RW | Optional | |
| | 2h | | Step notification position 1 | INT32 | RW | Optional | |
| | 3h | | Step notification position 2 | INT32 | RW | Optional | |
| 602Dh | -- | RECORD | PP/PVmode parameters 1 | -- | -- | -- | ROM |
| | 0h | | Number of parameters | UINT8 | RO | NO | |
| | 1h | | PP Accelerated speed | UINT32 | RW | Optional | |
| | 2h | | PP Dccelerated speed | UINT32 | RW | Optional | |
| | 3h | | PP Initial speed | UINT32 | RW | Optional | |
| | 4h | | PP Stop speed | UINT32 | RW | Optional | |
| 602Eh | -- | RECORD | PP/PVmode parameters 2 | -- | -- | -- | RAM |
| | 0h | | Number of parameters | UINT8 | RO | NO | |
| | 1h | | PP control word | UINT16 | RW | Optional | |

| | | | | | | | |
|---|---|---|---|---|---|---|---|
| | 2h | | PP status word | UINT16 | RW | Optional | |
| | 3h | | PP running speed | INT32 | RW | Optional | |
| | 4h | | PP target location | INT32 | RW | Optional | |
| 602Fh | -- | RECORD | Analog parameters | -- | -- | -- | ROM |
| | 0h | | Number of parameters | UINT8 | RO | NO | |
| | 1h | | Analog enabled | UINT8 | RW | NO | |
| | 2h | | Analog start_adc | UINT16 | RW | NO | |
| | 3h | | Analog end_adc | UINT16 | RW | NO | |
| | 4h | | Analog adjustment lower limit | UINT16 | RW | NO | |
| | 5h | | Analog adjustment upper limit | UINT16 | RW | NO | |
| | 6h | | Analog Adjustment Interval | UINT16 | RW | NO | |
| | 7h | | Analog adjustment trigger value | UINT16 | RW | NO | |
| | 8h | | Analog speed/position1 | INT32 | RW | NO | |
| | 9h | | Analog speed/position2 | INT32 | RW | NO | |
| 6030h | -- | VAR | real-time speed | INT32 | RW | Optional | RAM |
| 6031h | -- | RECORD | power-down behavior control | -- | -- | -- | ROM |
| | 0h | | Number of parameters | UINT8 | RO | NO | |
| | 1h | | Power-down behavior control word | UINT16 | RW | Optional | |
| | 2h | | Power off motor enabling threshold | UINT16 | RW | Optional | |
| | 3h | | Brake lock threshold | UINT16 | RW | Optional | |
| 6033h | -- | VAR | Motor wiring control | U8 | RW | NO | ROM |
| 6034h | -- | VAR | Calibration zero position | INT32 | RW | NO | ROM |
| 6035h | -- | VAR | Encoder position | INT32 | RW | Optional | RAM |

# 11 Appendix 2 CANopen Communication Examples

## 11.1 SDO Read/Write Examples

### 11.1.1 SDO Read

11.1.1.1 Data frame format

Master send:

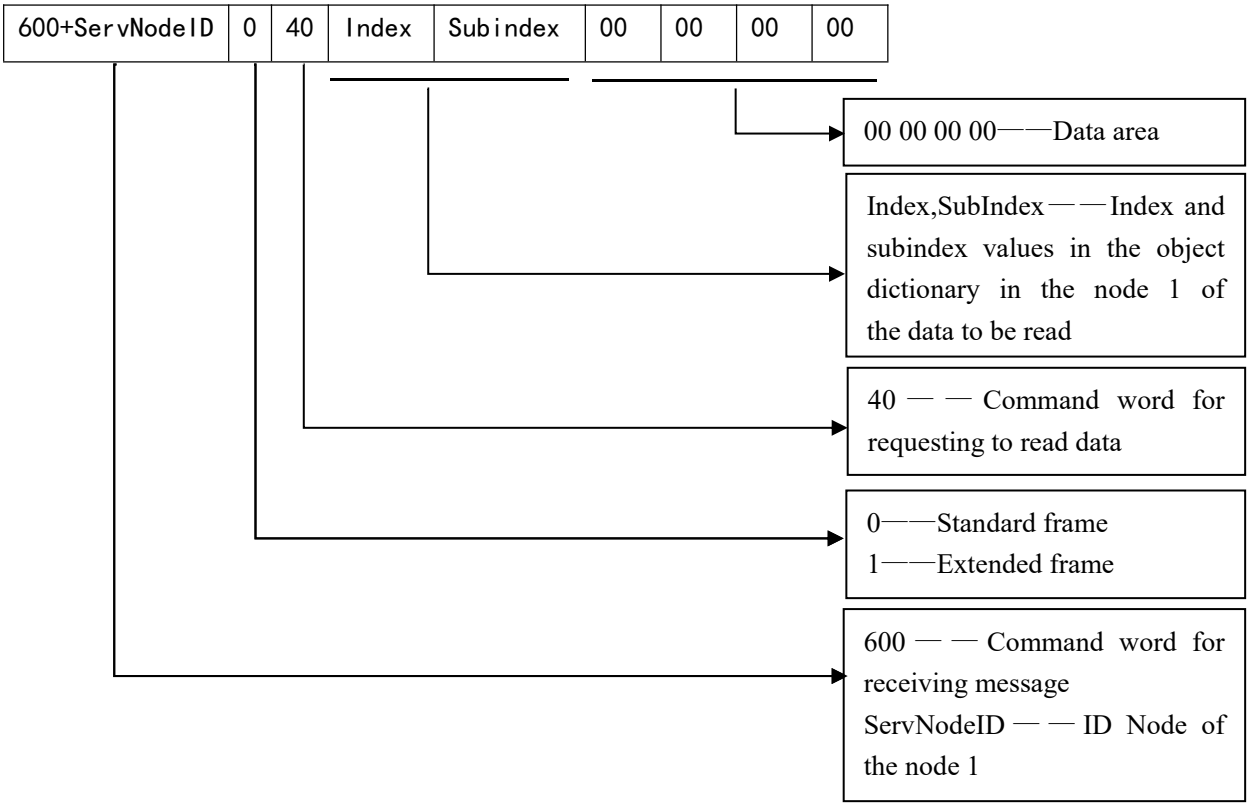


Slave response:

| | | | | | | | | |
|---|---|---|---|---|---|---|---|---|
| When the data length is 1 byte | | | | | | | | |
| 580+ServNodeID | 0 | 4F | Index | Subindex | d0 | 0 | 0 | 0 |
| When the data length is 2 bytes | | | | | | | | |
| 580+ServNodeID | 0 | 4B | Index | Subindex | d0 | d1 | 0 | 0 |
| When the data length is 3 bytes | | | | | | | | |
| 580+ServNodeID | 0 | 47 | Index | Subindex | d0 | d1 | d2 | 0 |
| When the data length is 4 bytes | | | | | | | | |
| 580+ServNodeID | 0 | 43 | Index | Subindex | d0 | d1 | d2 | d3 |

#### 11.1.1.2 SDO Read example

Master send: 605 40 01 60 00 00 00 00 00

Slave response: 585 4F 01 60 00 08 00 00 00

The master initiated a read request to the device whose node ID is 5. The index and subindex of the request are 0x6001 and 0x00 respectively, which corresponds to controller status parameter in the PMC007 Object Dictionary. The slave response 4F indicates that the parameter length is one byte, the data is 0x08 and the device is in busy state.

### 11.1.2 SDO Write in

#### 11.1.2.1 Data frame format

Master send:

| When the data length is 1 byte | | | | | | | | |
|---|---|---|---|---|---|---|---|---|
| 600+ServNodeID | 0 | 2F | Index | Subindex | d0 | 0 | 0 | 0 |
| When the data length is 2 byte | | | | | | | | |
| 600+ServNodeID | 0 | 2B | Index | Subindex | d0 | d1 | 0 | 0 |
| When the data length is 3 byte | | | | | | | | |
| 600+ServNodeID | 0 | 27 | Index | Subindex | d0 | d1 | d2 | 0 |
| When the data length is 4 byte | | | | | | | | |
| 600+ServNodeID | 0 | 23 | Index | Subindex | d0 | d1 | d2 | d3 |

Correct response from the slave station:

| 580+ServNodeID | 0 | 60 | Index | Subindex | 00 | 00 | 00 | 00 |
|---|---|---|---|---|---|---|---|---|

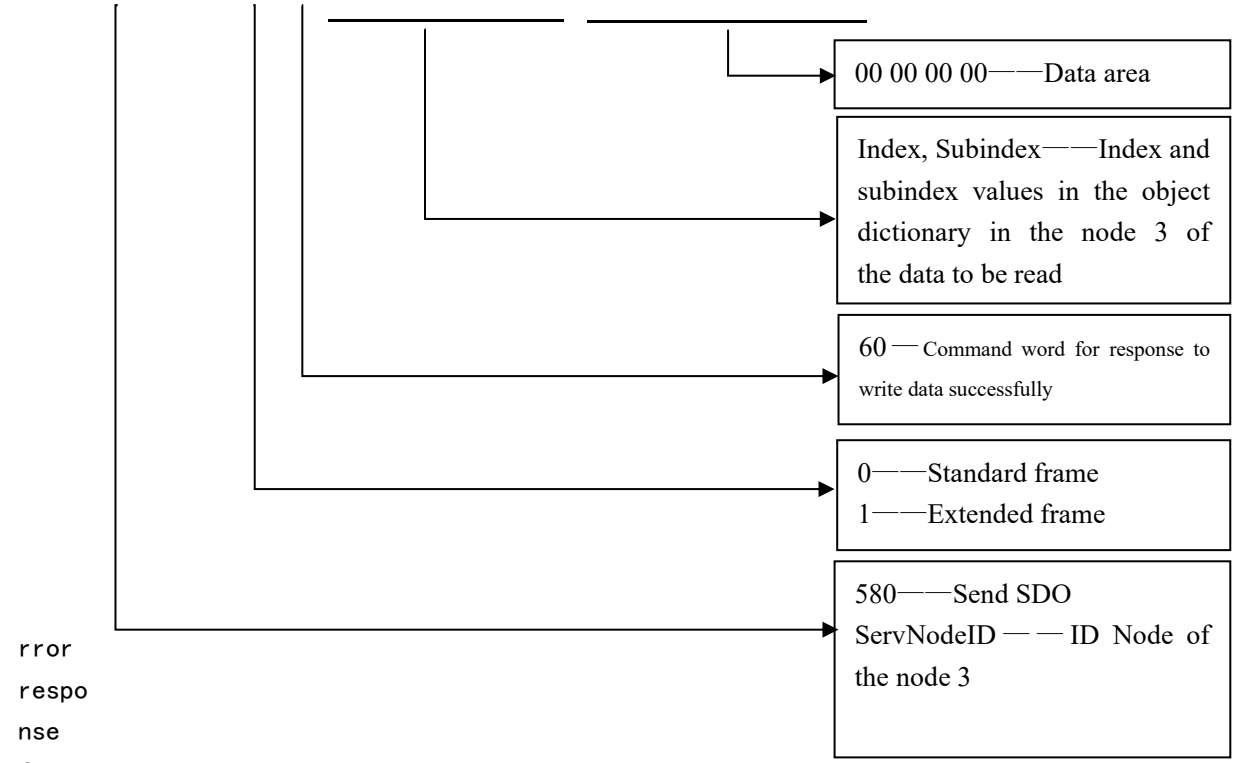


rror respo nse from the slave station:

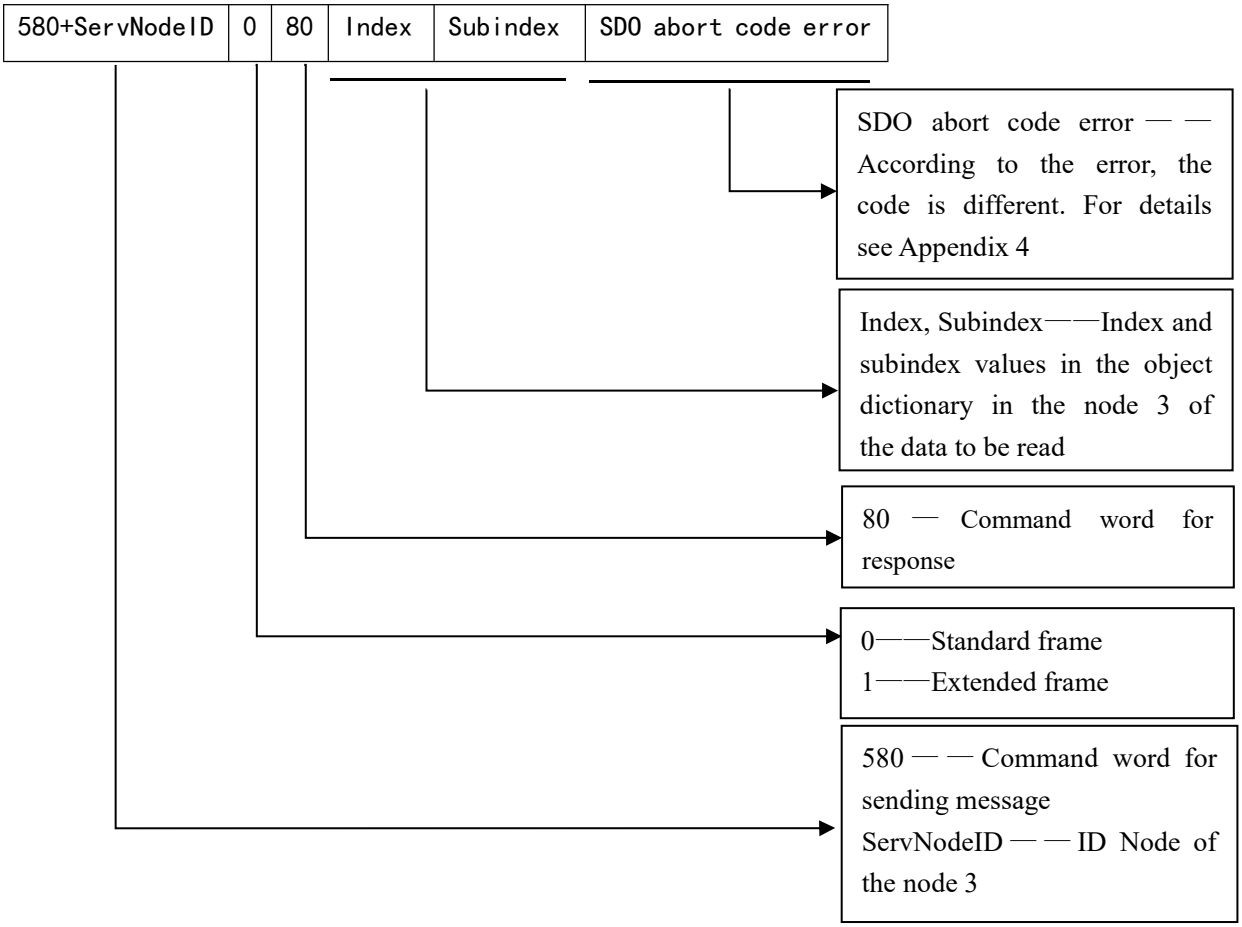


Note: Abort code error SDO returns the corresponding parameters according to the specific

error. The specific parameters are shown in Appendix 4.

#### 11.1.2.2 SDO Write example

Master send: 605 2F 03 20 00 07 00 00 00

Slave response: 585 60 03 20 00 00 00 00 00

The master initiated a write request to the device whose node ID is 5. The index and subindex of the request are 0x2003 and 0x00 respectively, which corresponds to the baud rate setting parameter in the PMC007 Object Dictionary. and the write data is 7, which indicates the baud rate is set to 800Kbit/s. The slave response 60 indicates the data is written successfully.

Master send: 605 23 04 60 00 80 0C 00 00

Slave response: 585 80 04 60 00 22 00 00 08

The master initiated a write request to the device whose node ID is 5. The index and subindex of the request are 0x6004 and 0x00 respectively, which corresponds to the step command parameter in the PMC007 Object Dictionary. and the write data is C80(3200), which indicates that the motor performs 3200 steps. The slave response 60 indicates the data is written unsuccessfully, and error code is 0x08000022. See Appendix 4 we can know that the error code indicates that the data cannot be transferred or saved to the application due to the current device status. Check whether the controller status parameter is that the external stop is enabled and whether there is an error in the error state.

# 12 Appendix 3 PDO configuration example

## 12.1 PDO overview

PDO communication is based on the Producer/Consumer model, which is mainly used to transfer real-time data. The node which generated data puts the data with its own node ID on the bus, and nodes which need the data can be configured to receive the data sent by the node. The transmission of PDO is triggered by the event, which can represent a change in a PDO variable and can also be a time of expiration or a specific message to be received. Process data is transmitted directly in an CAN message without a protocol header file. The length of a PDO is between 0 and 8 bytes.

PDOs is included in the mapping parameter and communication parameter. PMC006C1 supports 4 PDOs.

### 12.1.1 The structure PDO——Mapping parameter

A PDO in the Object Dictionary consists of adjacent items. The mapping parameters define the connection of these items. A mapping parameter defines a data source through an index, a subindex, and a number of bits.

For example:

| *Index* | *Sub-index* | *Object Data* | *Description* |
|---|---|---|---|
| 0x1A00 | 0 | 4 | Number of mapped entries |
| | 1 | 0x20000310 | The entry at index 0x2000, sub-index 3, with a length of 16 bit, is mapped to bytes 0 and 1 within the CAN message. |
| | 2 | 0x20000108 | The entry at index 0x2000, sub-index 1, with a length of 8 bit, is mapped to byte 2 within the CAN message. |
| | ... | ... | |

*Table 1: Example for mapping parameters for the first TPDO*

A CAN message has not more than 8 bytes. This means that there can send 8 object items at most when there is only one PDO used.

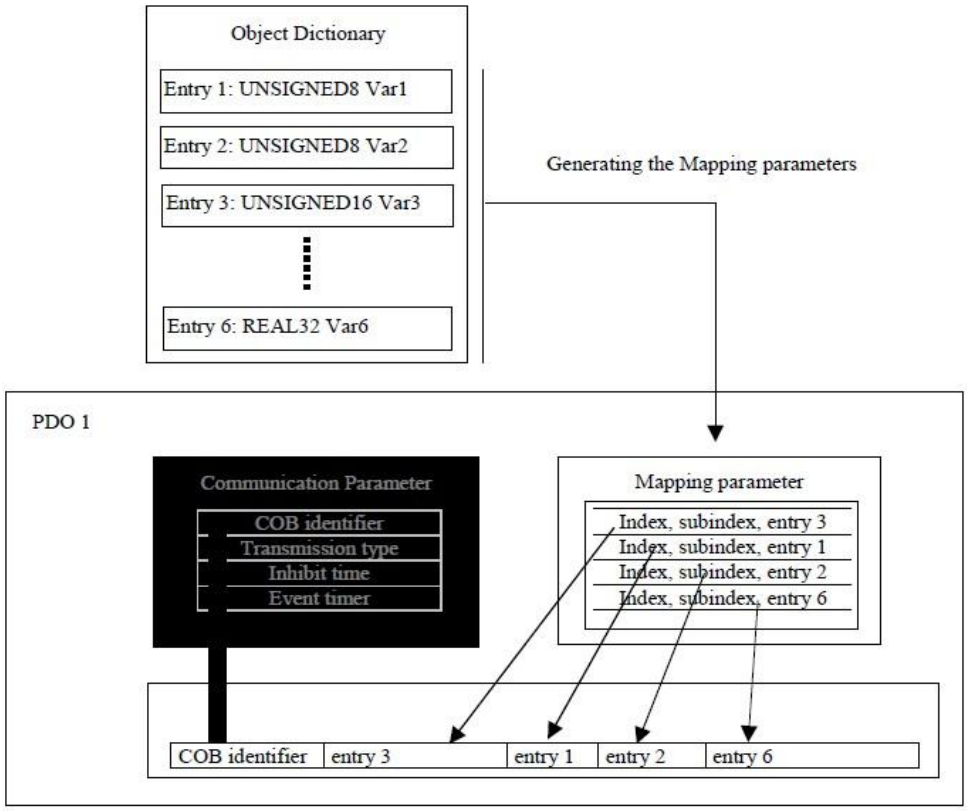


*Figure 3: Mapping of Object Dictionary entries into a PDO*

### 12.1.2 The structure PDO——Communication parameter

In order to transmit a PDO, the communication parameter defines the nature of the transport and the CAN identifier.

| Index | Sub-index | Object Data | Description |
|---|---|---|---|
| 1800h | 0 | Number on entries | |
| | 1 | COB-ID | CAN identifier for the PDO |
| | 2 | Transmission Type | transmission type of the PDO |
| | 3 | Inhibit Time | minimum inhibit time for a TPDO |
| | 4 | reserved | reserved |
| | 5 | Event Time | maximum time between two TPDOs |

*Table 4: Communication parameter for the first TPDO*

PDO communication parameter is an item in the Object Dictionary.

(RPDOs: index 0x1400 – 0x15FF,TPDOs: 0x1800-0x19FF)

If allowed, the communication parameter can be modified by the CAN with the help of the data service object.

COB-ID(CAN identifier. Subindex 1)

COB-ID as proof of identity, the priority of PDO is before the bus access. For every CAN message, there is only one sender (producer). However, it allows multiple recipients (consumers) for the existing message.

| *Bit* | *31* | *30* | *29* | *28 – 11* | *10 - 0* |
|---|---|---|---|---|---|
| 11-bit-ID | 0/1 | 0/1 | 0 | 000000000000000000 | 11-bit identifier |
| 29-bit-ID | 0/1 | 0/1 | 1 | 29-bit identifier | |

*Table 5: Structure of a COB-ID for PDOs*

The thirtieth bit is 0, which indicates that a remote transmission request (RTR) is allowed for this PDO.

PDO COB-ID distribution:

| | |
|---|---|
| PDO1(send) | 181H-1FFH |
| PDO1(receive) | 201H-27FH |
| PDO2(send) | 281H-2FFH |
| PDO2(receive) | 301H-37FH |
| PDO3(send) | 381H-3FFH |
| PDO3(receive) | 401H-47FH |
| PDO4(send) | 481H-4FFH |
| PDO4(receive) | 501H-57FH |

### 12.1.3 PDO Trigger mode

Sending of PDO can be triggered by the following methods:

1) Event trigger.

2) Time trigger.

3) Single query.

4) Synchronization.

When only use event to trigger the sending of PDO, once the event process is changed, the PDO is sent. It may bring very serious consequences, that is, when the frequency of a process data change is very high, the PDO is sent uninterruptedly , that will cause the message of other nodes is not sent out, which seriously affect the efficiency of the bus.

CANopen uses the " Inhibit time " mechanism to solve this problem. Inhibit time is a configurable time period in units of 100 us. The same PDO sends at least this time interval, so it can determine the maximum transmission frequency of an event triggered PDO.

Generally, the sending of PDO can be triggered by a combination of any of the trigger mode. But the most common way is to combine the Event trigger and Time trigger. In the case of single event trigger, since process data did not change for a long time (such as temperature variables), the PDO have not been triggered for a long time. It will affect the nodes just joined the network. So if plus time triggered mode, PDO is forced to send again within the stipulated time. For example, for a PDO, the inhibition time is configured as 5, event timer is configured as 250, so the PDO can be sent when process data changes. The minimal interval of sending is 5ms, on the other hand, no matter whether there is no change in the data, the PDO will be sent every 250ms.

Configuration of PDO trigger mode is realized through setting subindex 2 in the Object Dictionary of PDO communication parameter. The range of the subindex is 0-255 The following lists the different values for different trigger modes.

0: PDO is sent after SYNC is received, but not cycle.

1-240: PDO is sent periodically after SYNC is received . The value is the number of SYNC between two send of PDO .

255：Event trigger.

## 12.2 PDO Configuration example

PMC006C1 supports PDO mapping by SDO configuration. To configure the GPIO value to be TPDO1 as an example, the SDO is sent as:

Set the COB-ID of communication to 187, which means that the device with node ID 7 receives this PDO

Sent by the main station: 607 23 00 18 01 87 01 00 80

Clear channel information

Main station sending: 607 2F 00 1A 00 00 00 00 00 00

Set as event triggered

Main station sending: 607 2F 00 18 02 FF 00 00 00 00

Set the Inhibit time to 5ms

Sent by the main station: 607 2B 00 18 03 32 00 00 00

Set the Event time to 1000ms

Sent by the main station: 607 2B 00 18 05 E8 03 00 00

Set mapping parameters to map 0x6012 to TPDO1

Main station sending: 607 23 00 1A 01 10 00 12 60

Set the mapping channel TPDO2 parameter to 0

Sent by the main station: 607 23 00 1A 02 00 00 00 00 00

Set the mapping channel TPDO3 parameter to 0

Main station sending: 607 23 00 1A 03 00 00 00 00 00

Set the number of mapping entries 1

Main station sending: 607 2F 00 1A 00 01 00 00 00

Resend communication site information

Sent by the main station: 607 23 00 18 01 83 01 00 00After the configuration is completed, PMC007 will send PDO message every 1s. When the of value GPIO port is changed, PMC007 will also issue the message.

187 03 00

The message indicates that GPIO1 and GPIO2 are both high level.

## 13 Appendix 4 SDO abort code error

| Abort code | Code function description |
|---|---|
| 05030000 | No alternation of trigger bits |
| 05040000 | SDO protocol timeout |
| 05040001 | Illegal or unknown Client/Server command word |
| 05040002 | Invalid block size (only Transfer Block mode) |
| 05040003 | Invalid serial number (only Transfer Block mode) |
| 05030004 | CRC error (only Transfer Block mode) |
| 05030005 | Out of memory |
| 06010000 | Access is not supported for the Object. |
| 06010001 | Try to read write-only objects |
| 06010002 | Try to write read-only objects |
| 06020000 | Object does not exist in the Object Dictionary |
| 06040041 | Object cannot be mapped to PDO |
| 06040042 | The number and length of the mapped object exceeds the PDO length |
| 06040043 | General parameters are not compatible |
| 06040047 | General equipment is not compatible |
| 06060000 | Hardware error causes the object access failure |
| 06060010 | Data type does not match, and service parameter length does not match |
| 06060012 | Data type does not match, the service parameter is too large |

| | |
|---|---|
| 06060013 | Data type does not match, the service parameter is too small |
| 06090011 | The subindex does not exist |
| 06090030 | Beyond the range of the parameter values (when write access) |
| 06090031 | Parameter value is written too large |
| 06090032 | Parameter value is written too small |
| 06090036 | The maximum value is less than the minimum value |
| 08000000 | General error |
| 08000020 | Data cannot be transferred or saved to applications |
| 08000021 | Due to local control, data cannot be transferred or saved to applications |
| 08000022 | Due to the current device status, data cannot be transferred or saved to applications |
| 08000023 | The dynamic condition of Object dictionary generates error or Object Dictionary does not exist |